REV.	DESCRIPTION	REVISED BY	DATE
A		Yang	29/5/2025

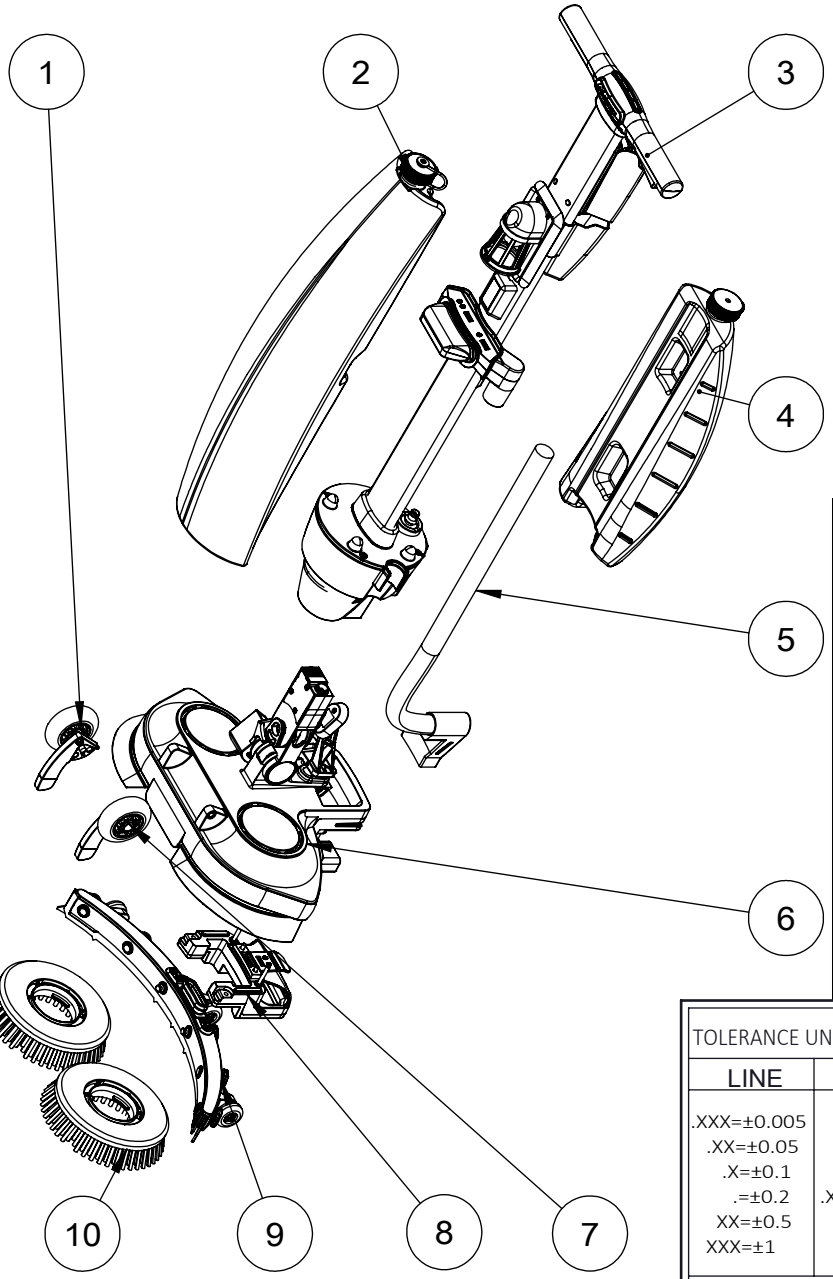

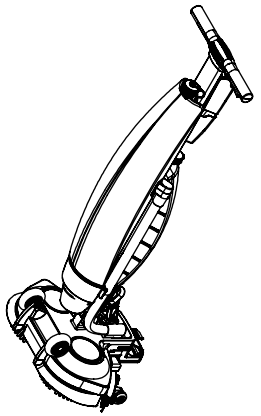

Item	P/N	Desciption	Qty
1	S.115.0031.357	ASSY TRANSPORT WHEEL PILLAR RIGHT	1
2	S.115.1089.2AT	ASSY VACUUM ANTIBACTERIAL WHITE TANK + PRINT	1
3	S.139.0091.0/FCT	FCT • TOP UNIT ASSEMBLY WITHOUT FILTER FCT	1
4	S.115.1079.0B	[MCH-211-016-103]ASSY FRESH WATER TANK + PRINT	1
5	S.115.2059.0	ASSY MAIN SUCTION HOSE	1
6	S.115.3041.357	ASSY DECK L36	1
7	S.115.0030.357	ASSY TRANSPORT WHEEL PILLAR LEFT	1
8	S.115.0160.0	FLOOR UNIT HANDLE GRIP [MCH 211-050](101)	1
9	S.115.0062.2A	ASSY SQUEEGEE MAIN HOUSING TENNANT	1
10	S.115.1054.797/797B	ASSY BRUSH BLUE BRISTLE | BLUE LOCKER	2

TOLERANCE UNSPECIFIED		REMARK:							
LINE	ANGLE								
.XXX=±0.005 .XX=±0.05 .X=±0.1 .=±0.2 XX=±0.5 XXX=±1	X=±2° .X=±1.5° .XX=±1° .XXX=±0.5°	MATERIAL							
		APPROVED	CHECKED	DESIGNED	REV.	-	PART NAME	KIT ASSY IMOP 36 BASIC ITEAM W/O I-POWER	
				Yang	UNIT	MM	PART NO.	K1.IMP36N.FCT.0	FRAME SIZE
SHEET OF	DATE			2025/5/29	SCALE	1 : 10	DRAWING NO.		A4

SMT-FCT DONGGUAN
THE FRIENDLY FAMILY

东莞硕能塑胶模具有限公司

ASSEMBLY AND MOULD OF CLEANING PRODUCTS

REV.	DESCRIPTION	REVISED BY	DATE
A		Yang	29/5/2025

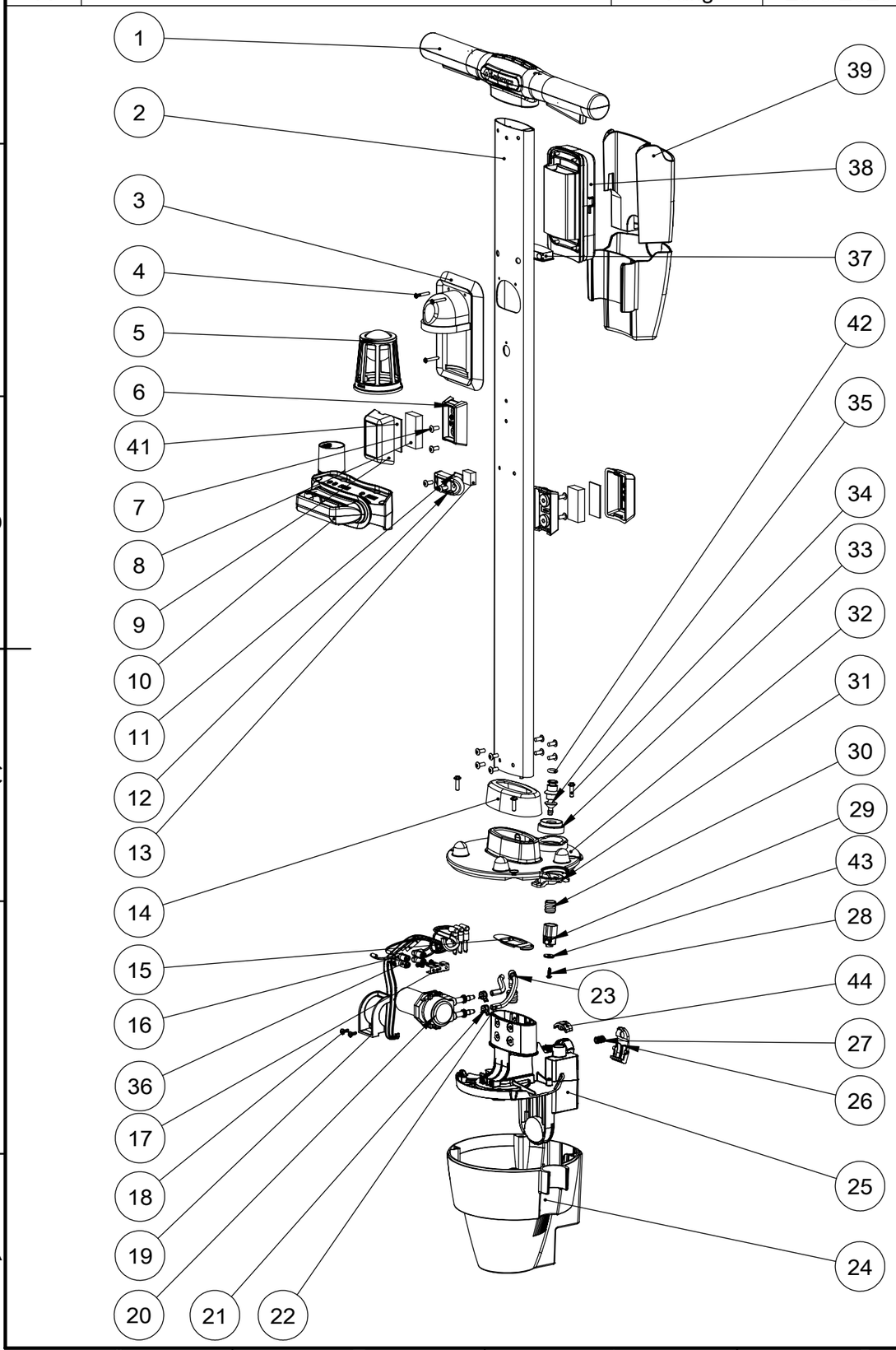



Item	P/N	Desciption	Qty
	S.139.0091.1	TOP UNIT ASSEMBLY WITH FILTER	
1	S.139.1718.357	PLASTIC HANDLE ASSEMBLY FOUR SWITCH (ONE SPEED)	1
2	139.0091.0	ALU EXTRUDED PROFILE	1
3	115.1151.0D	FLOAT HOUSING RUBBER BASE	1
4	115.0039.3	PAN HEAD OD=7MM SELFTAPPING SCREW ST3X20	3
5	S.115.1153.8	FLOAT BALL HOUSING WITH STAINLESS STEEL MESH ASSY	1
6	115.0103.8D	[MCH 211-145] (105)TANK HOLDER FIXATION YELLOW	2
7	115.0194.0	(MCH 041-102) [101] CLOSED RIVET 4X10	12
8	115.0099.0	[MCH 053-105] (101) NEODYMIUM MAGNET BLOCK 40X20X10MM	2
9	115.0104.8C	[MCH 211-146] (104)TANK HOLDER COVER YELLOW	2
10	S.115.0246.2	ASSY HOSE CONNECTOR HOLDER BOTTOM	1
11	115.0196.2	EVA WASHER 15x15x1.5MM	1
12	115.0102.8D	[MCH 211-144] (105)HOSE CONNECTOR HOLDER FIXATION YELLOW	1
13	115.0100.0	[MCH 053-106] (101) NEODYMIUM MAGNET BLOCK 15X15X8MM	1
14	139.0003.0	ALLUMINIUM TUBE SEALING SLEEVE	1
15	139.0005.0	ALUMINUM PROFILE RUBBER SEAL	1
16	139.0071.0	NEGATIVE WIRE	1
17	72.0764.0	CABLE CONCENTRATOR IMOPXL BOM	1
18	115.0011.0	(MCH 011-101) [101] EJOT PT SCREW WN 5451 30X10	4
19	139.0016.357	HOLDER WATERPUMP	1
20	139.0015.0	KHPP260 PUMP 12V	1
21	139.0109.0	HOSE CLAMP STAINLESS STEEL Ø8 WIRE DIA.Ø1.0	4
22	R.106.2190.9	CUTTING L=0.065M SILICON TUBE 8X4.5MM	2
23	139.0011.357	water coupling	1
24	S.139.0310.357	VACUUM MOTOR ASSEMBLY L40 WITHOUT FILTER	1
25	139.0014.357	MAINFRAME	1
26	139.1013.357	PUSH BUTTON imop36	1
27	139.0010.0	SPRING BUTTON	1
28	115.0011.0	(MCH 011-101) [101] EJOT PT SCREW WN 5451 30X10	3
29	139.0012.357	DRIVE MODULE WATER COUPLING	1
30	139.0004.0	GROMMET WATER CONNECTOR	2
31	139.0009.357	HOLDER WATER CONNECTOR	1
32	139.0093.357	LID TURBINE HOUSING	1
33	115.0111.0D	[MCH 211-203] (105)WATER CONNECTOR MALE RUBBER	1
34	115.0120.0	[MCH 011-102] (101) EJOT PT SCREW WN 5451 40X14	4
35	139.0110.0	WATER CONNECTOR MALE PIN	1
36	139.0083.0	WATER PUMP WIRE	1
37	39.0001.0	AIR DUCT SEALING PLUG	1
38	S.115.1396.357	MAIN PCB BOX ASSEMBLY WITHOUT LINK	1
39	S.139.0036.357	ASSY PHONE HOLDER&RUBBISH BIN	1
40	S.139.0105.0	CABLE ASSY IN ALUMINIUM TUBE FOR I-MOP L40	1
41	115.0196.1	EVA WASHER 40x20x1.5MM	2
42	115.0096.67	O-RING 6X3 FKM	1
43	139.0124.0	WASHER OD11.5XT4	1
44	139.0111.357	PUSH BUTTON LOCKER imop36	1

TOLERANCE UNSPECIFIED		REMARK:						
LINE	ANGLE							
.XXX=±0.005 .XX=±0.05 .X=±0.1 .=±0.2 XX=±0.5 XXX=±1	X=±2° .X=±1.5° .XX=±1° .XXX=±0.5°	MATERIAL						
		APPROVED	CHECKED	DESIGNED	REV.		PART NAME	KIT ASSY IMOP 36 BASIC ITEAM W/O I-POWER
				Yang	UNIT	MM	PART NO.	K1.IMP36N.FCT.0
SHEET OF	DATE			2025/5/29	SCALE	1 : 6	DRAWING NO.	

FRAME SIZE: A3

SMT-FCT DONGGUAN
THE FRIENDLY FAMILY
东莞硕能塑胶模具有限公司
ASSEMBLY AND MOULD OF CLEANING PRODUCTS

REV.	DESCRIPTION	REVISED BY	DATE
A		Yang	29/5/2025

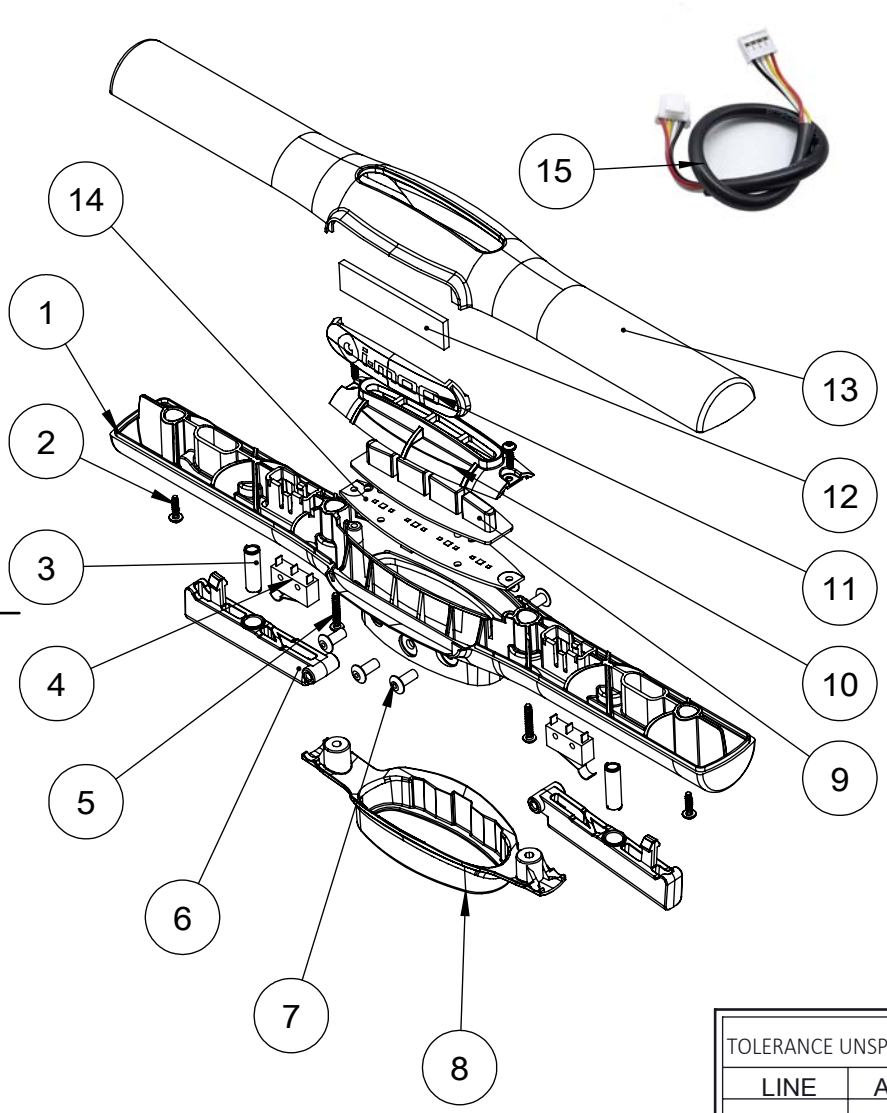

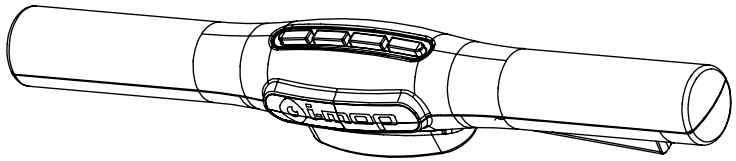

Item	P/N	Desciption	Qty
	S.139.1718.357	PLASTIC HANDLE ASSEMBLY FOUR SWITCH (ONE SPEED)	
1	139.0718.357	HANDLE LOWER PART	1
2	115.0011.0	(MCH 011-101) [101] EJOT PT SCREW WN 5451 30X10	4
3	119.0096.0A	SPRING 19.2X5.7X0.5MM	2
4	S.72.0722.0	ASSY POWER SWITCH CONTROL UNIT	1
5	115.0184.0	[MCH 011-103-101] EJOT PT SCREW WN 5452 30X16	2
6	139.0716.797	OPERATING LEVER	2
7	115.0194.0	(MCH 041-102) [101] CLOSED RIVET 4X10	6
8	139.0726.357	HANDLE COVER	1
9	115.1138.0B	[MCH 211-164] (103) CONTROL UNIT KEY PAD	1
10	115.0134.2B	[MCH 211-140] (103) CONTROL UNIT KEY PAD FRAME WHITE	1
11	139.0034.0	LIGHT GUIDE HANDLE	1
12	139.0035.0	LED HANDLE	1
13	139.0714.357	HANDLE UPPER PART	1
14	139.1715.0	PCB HANDLE FOUR SWITCH (ONE SPEED)	1
15	72.0723.0	I-MOP L46 COMMUNICATION CABLE 4P 2.0 WITH LOCK L=200MM	1

TOLERANCE UNSPECIFIED		REMARK:			SMT-FCT DONGGUAN THE FRIENDLY FAMILY				
LINE	ANGLE				东莞硕能塑胶模具有限公司				
.XXX=±0.005 .XX=±0.05 .X=±0.1 .=±0.2 XX=±0.5 XXX=±1	X=±2° .X=±1.5° .XX=±1° .XXX=±0.5°	MATERIAL			ASSEMBLY AND MOULD OF CLEANING PRODUCTS				
		APPROVED	CHECKED	DESIGNED	REV.	-	PART NAME	KIT ASSY IMOP 36 BASIC ITEAM W/O I-POWER	
				Yang	UNIT	MM	PART NO.	K1.IMP36N.FCT.0	FRAME SIZE
SHEET OF	DATE			2025/5/29	SCALE	1 : 3	DRAWING NO.		A4

REV.	DESCRIPTION	REVISED BY	DATE
A		Yang	29/5/2025

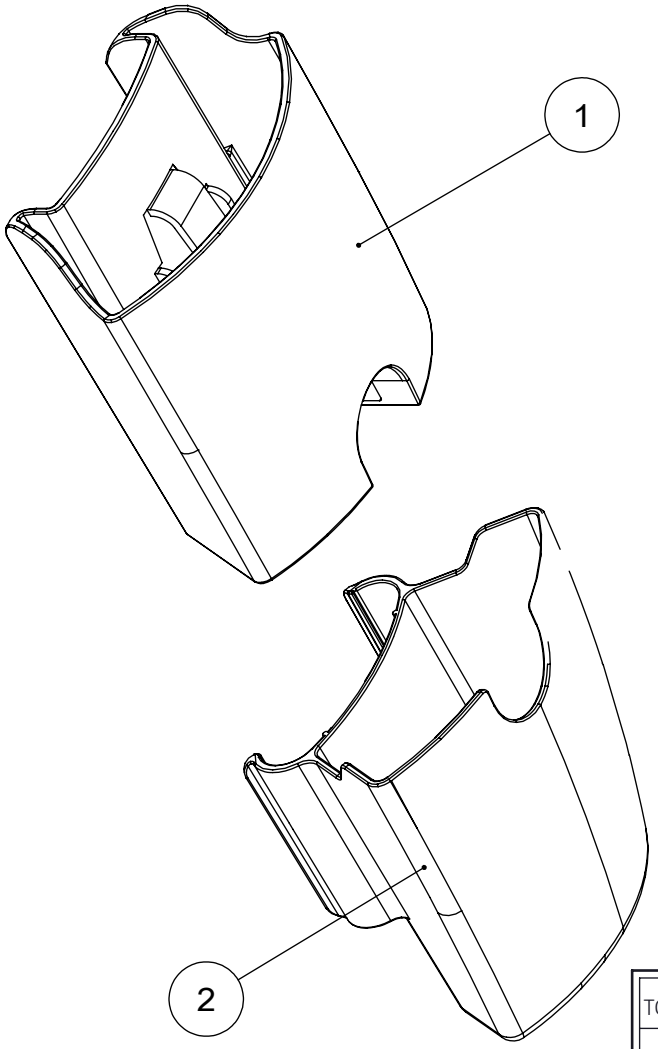

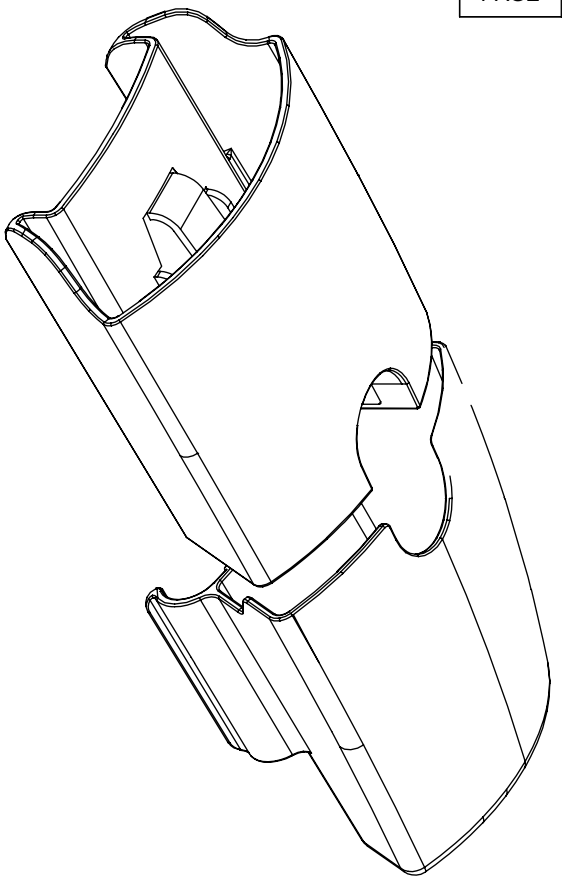

Item	P/N	Desciption	Qty
	S.139.1718.357	PLASTIC HANDLE ASSEMBLY FOUR SWITCH (ONE SPEED)	
1	139.0036.357	MOBILE PHONE HOLDER	1
2	139.0037.357	RUBBISH BIN	1

TOLERANCE UNSPECIFIED		REMARK:							
LINE	ANGLE								
.XXX=±0.005 .XX=±0.05 .X=±0.1 .=±0.2 XX=±0.5 XXX=±1	X=±2° .X=±1.5° .XX=±1° .XXX=±0.5°	MATERIAL							
		APPROVED	CHECKED	DESIGNED	REV.	-	PART NAME	KIT ASSY IMOP 36 BASIC ITEAM W/O I-POWER	
				Yang	UNIT	MM	PART NO.	K1.IMP36N.FCT.0	FRAME SIZE
SHEET OF	DATE			2025/5/29	SCALE	2 : 1	DRAWING NO.		A4

SMT-FCT DONGGUAN
THE FRIENDLY FAMILY

东莞硕能塑胶模具有限公司

ASSEMBLY AND MOULD OF CLEANING PRODUCTS

REV.	DESCRIPTION	REVISED BY	DATE
A		Yang	29/5/2025

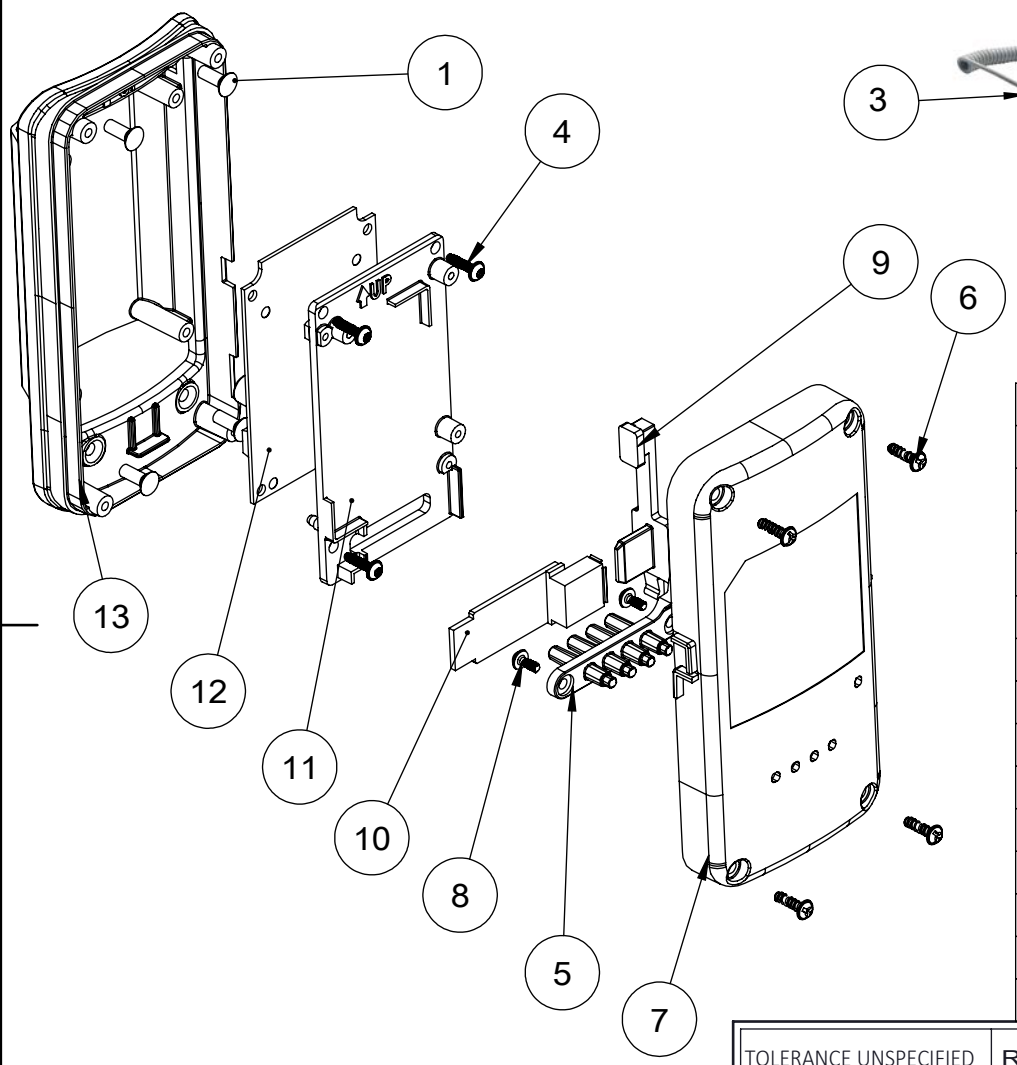

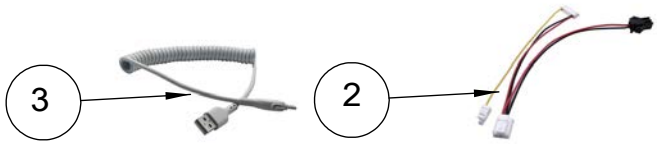

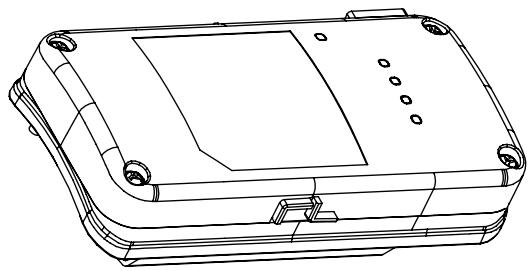

Item	P/N	Desciption	Qty
	S.115.1396.357	MAIN PCB BOX ASSEMBLY WITHOUT LINK	
1	72.0240.2	HEXALOBULAR SOCKET COUNTERSUNK HEAD SELFTAPPINGSCREW ST3X10	4
2	72.0769.0	WIRING HARNESS I-LINK&USB CHARGING FOR I-MOP L46	1
3	115.0318.0	USB phone charging cable 3 in 1	1
4	115.0011.0	(MCH 011-101) [101] EJOT PT SCREW WN 5451 30X10	3
5	115.0403.996	ELECTRIC BOX LIGHT GUIDING BLOCK	1
6	115.0011.3	EJOT PT SCREW WN 5451 30X10 ANTI-THEFT	4
7	115.0398.357	MAIN PCB BOX COVER	1
8	115.0275.0	[MCH-011-105](101) EJOT PT SCREW WN 5451 25X6	5
9	115.0399.0	USB PORT PLUG	1
10	S.72.0619.0	USB CHARGING PCB CABLE ASSY OUTPUT DC5V	1
11	115.0397.357	MAIN PCB BOX TOOLSENSE TRAY	1
12	72.0711.1	MAIN PCB IMOP L36/40	1
13	115.0396.357	MAIN PCB BOX HOUSING	1

TOLERANCE UNSPECIFIED		REMARK:			SMT-FCT DONGGUAN THE FRIENDLY FAMILY				
LINE	ANGLE				东莞硕能塑胶模具有限公司				
.XXX=±0.005 .XX=±0.05 .X=±0.1 .=±0.2 XX=±0.5 XXX=±1	X=±2° .X=±1.5° .XX=±1° .XXX=±0.5°	MATERIAL			ASSEMBLY AND MOULD OF CLEANING PRODUCTS				
		APPROVED	CHECKED	DESIGNED	REV.	-	PART NAME	KIT ASSY IMOP 36 BASIC ITEAM W/O I-POWER	
				Yang	UNIT	MM	PART NO.	K1.IMP36N.FCT.0	FRAME SIZE
SHEET OF	DATE			2025/5/29	SCALE	1 : 2	DRAWING NO.		A4

REV.	DESCRIPTION	REVISED BY	DATE
A		Yang	29/5/2025

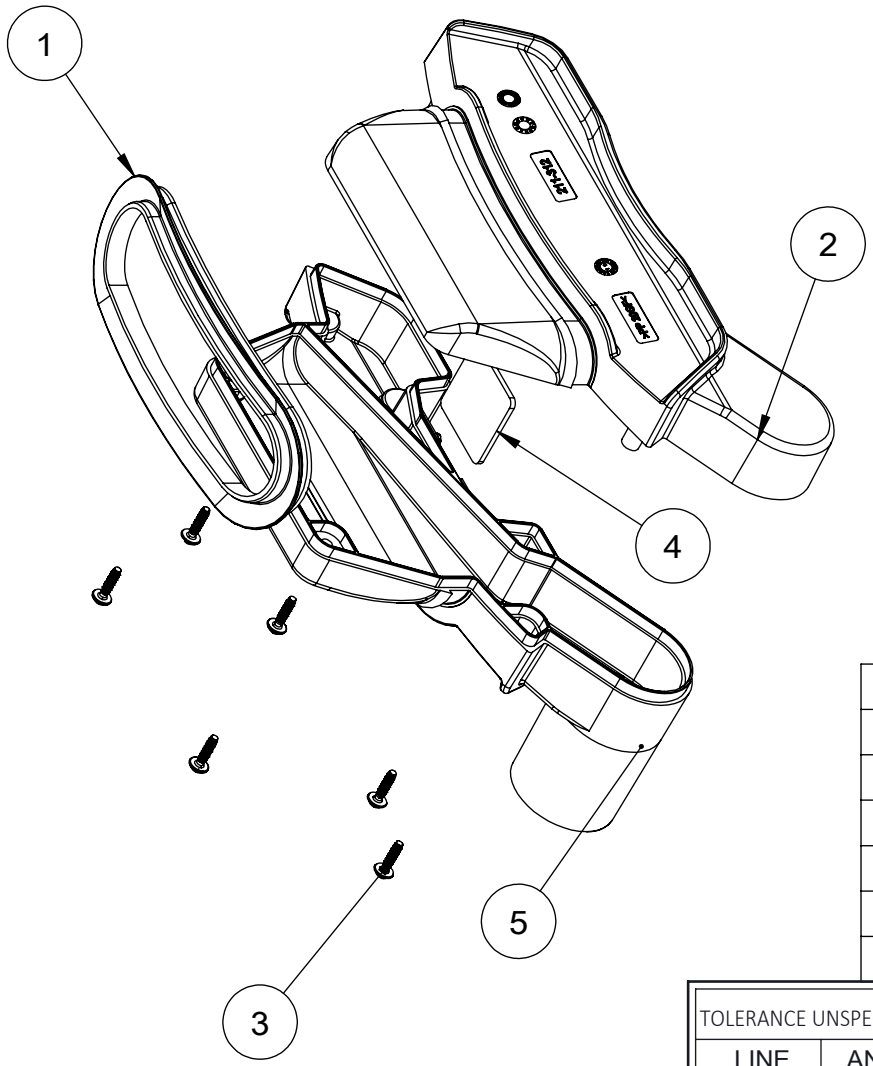

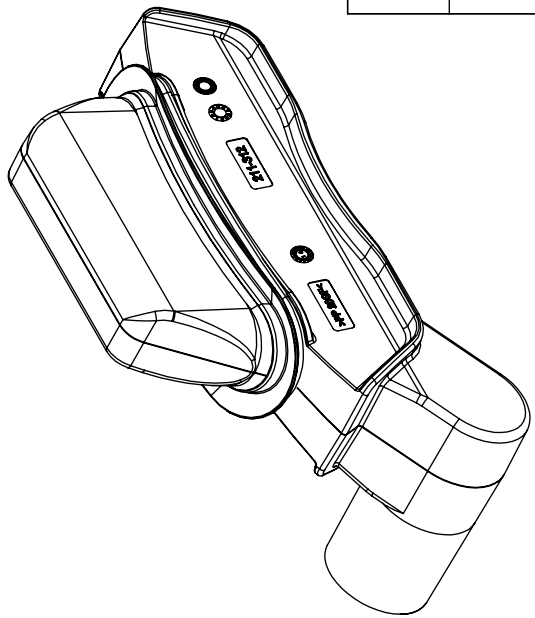

Item	P/N	Desciption	Qty
	S.115.0246.2	ASSY HOSE CONNECTOR HOLDER BOTTOM	
1	115.1131.0B	HOSE CONNECTOR HOLDER SEAL	1
2	115.0246.2	(MCH 211-312-101) HOSE CONNECTOR HOLD	1
3	115.0011.0	(MCH 011-101) [101] EJOT PT SCREW WN 5451 30X10	6
4	115.0132.0B	[MCH 211-173] (103) HOSE CONNECTOR HOLDER PLATE	1
5	115.0247.2	(MCH 211-309-101) HOSE CONNECTOR HOLDER BOTTOM	1

TOLERANCE UNSPECIFIED		REMARK:							
LINE	ANGLE								
.XXX=±0.005 .XX=±0.05 .X=±0.1 .=±0.2 XX=±0.5 XXX=±1	X=±2° .X=±1.5° .XX=±1° .XXX=±0.5°	MATERIAL							
		APPROVED	CHECKED	DESIGNED	REV.	-	PART NAME	KIT ASSY IMOP 36 BASIC ITEAM W/O I-POWER	
				Yang	UNIT	MM	PART NO.	K1.IMP36N.FCT.0	FRAME SIZE
SHEET OF	DATE			2025/5/29	SCALE	1 : 2	DRAWING NO.		A4

SMT-FCT DONGGUAN
THE FRIENDLY FAMILY

东莞硕能塑胶模具有限公司

ASSEMBLY AND MOULD OF CLEANING PRODUCTS

REV.	DESCRIPTION	REVISED BY	DATE
A		Yang	29/5/2025

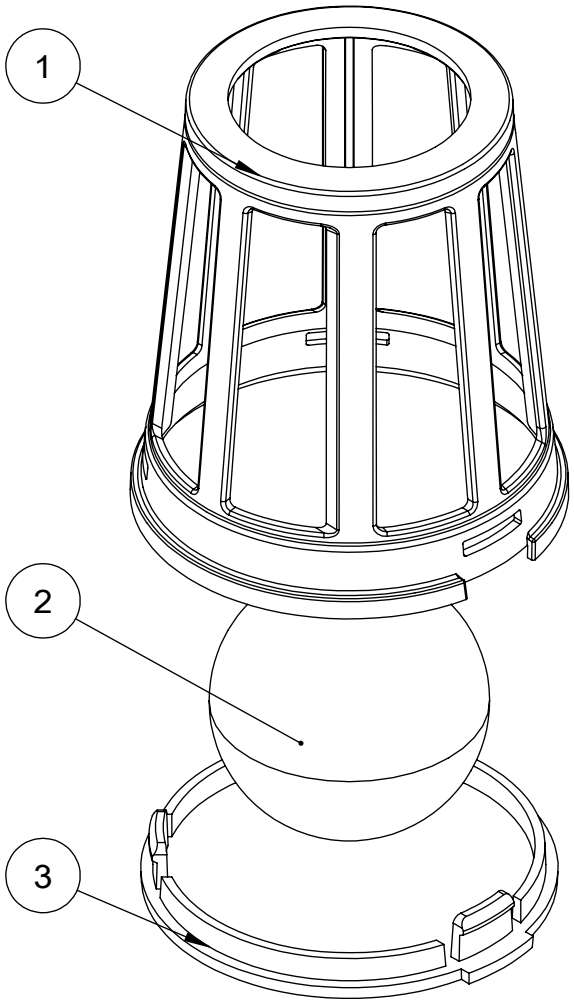

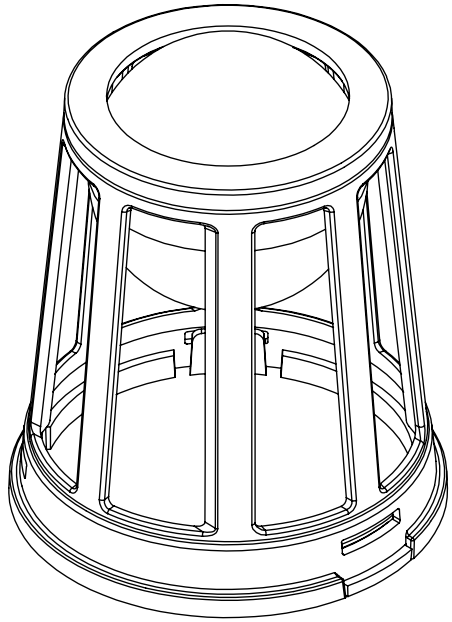

Item	P/N	Desciption	Qty
	S.115.1153.8	FLOAT BALL HOUSING WITH STAINLESS STEEL MESH ASSY	
1	115.1154.8	BLOCKING BALL HOUSING GREY WITH STAINLESS STEEL MESH 100	1
2	115.0153.2	[MCH 053-108-101] WHITE HOLLOW BALL 38	1
3	115.1152.8	TOP UNIT BLOCKING BALL HOUSING COVER	1

TOLERANCE UNSPECIFIED		REMARK:			SMT–FCT DONGGUAN THE FRIENDLY FAMILY				
LINE	ANGLE				东莞硕能塑胶模具有限公司				
.XXX=±0.005 .XX=±0.05 .X=±0.1 .=±0.2 XX=±0.5 XXX=±1	X=±2° .X=±1.5° .XX=±1° .XXX=±0.5°	MATERIAL			ASSEMBLY AND MOULD OF CLEANING PRODUCTS				
		APPROVED	CHECKED	DESIGNED	REV.	-	PART NAME	KIT ASSY IMOP 36 BASIC ITEAM W/O I-POWER	
				Yang	UNIT	MM	PART NO.	K1.IMP36N.FCT.0	FRAME SIZE
SHEET OF	DATE			2025/5/29	SCALE	1 : 1	DRAWING NO.		A4

REV.	DESCRIPTION	REVISED BY	DATE
A		Yang	29/5/2025

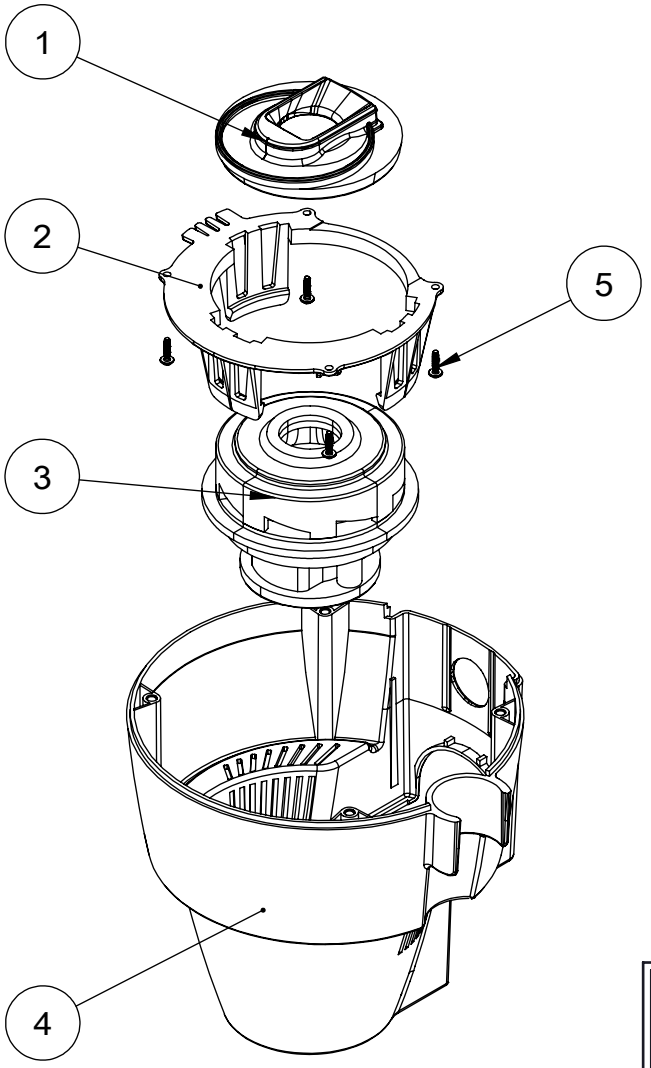

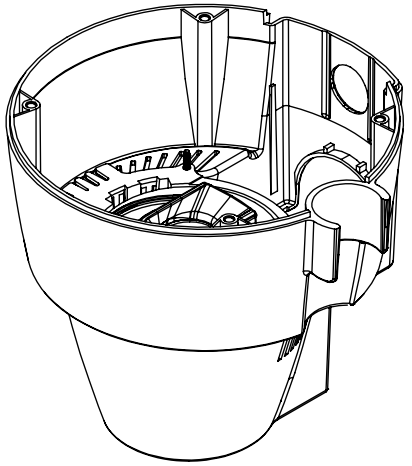

Item	P/N	Desciption	Qty
	S.139.0310.357	VACUUM MOTOR ASSEMBLY L40 WITHOUT FILTER	
1	139.0006.1	VACUUM MOTOR SEALING GASKET TOP WITHOUT FILTER	1
2	139.0017.357	TURBINE HOLDER WITHOUT FILTER	1
3	139.0310.0	BRUSHLESS MOTOR 13-30V DC 60W/80W/100W GLUE DIPPING 36/40	1
4	139.1117.357	MAIN COVER TURBINE HOUSING WITHOUT FILTER imop36	1
5	115.0011.0	(MCH 011-101) [101] EJOT PT SCREW WN 5451 30X10	4

TOLERANCE UNSPECIFIED

LINE	ANGLE
.XXX=±0.005 .XX=±0.05 .X=±0.1 .=±0.2 XX=±0.5 XXX=±1	X=±2° .X=±1.5° .XX=±1° .XXX=±0.5°

REMARK:

MATERIAL

SMT-FCT DONGGUAN
THE FRIENDLY FAMILY

东莞硕能塑胶模具有限公司

ASSEMBLY AND MOULD OF CLEANING PRODUCTS

APPROVED	CHECKED	DESIGNED	REV.	-	PART NAME	KIT ASSY IMOP 36 BASIC ITEAM W/O I-POWER	
		Yang	UNIT	MM	PART NO.	K1.IMP36N.FCT.0	FRAME SIZE
SHEET OF	DATE	2025/5/29	SCALE	1 : 5	DRAWING NO.		A4

REV.	DESCRIPTION	REVISED BY	DATE
A		Yang	29/5/2025

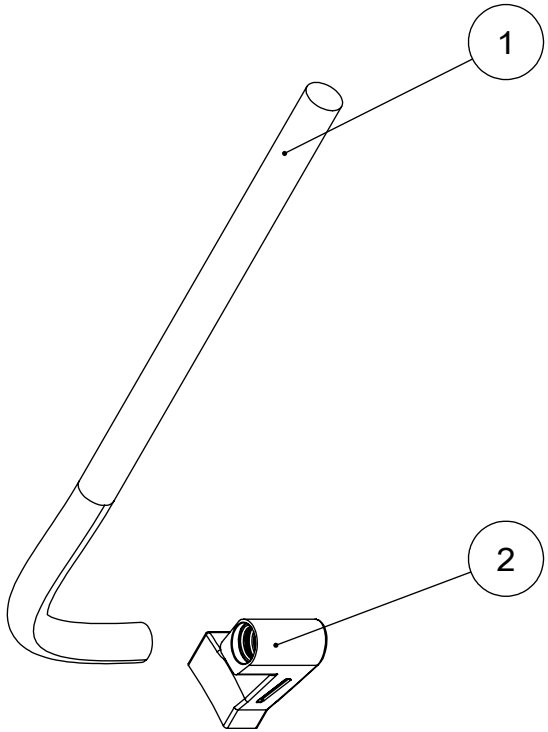

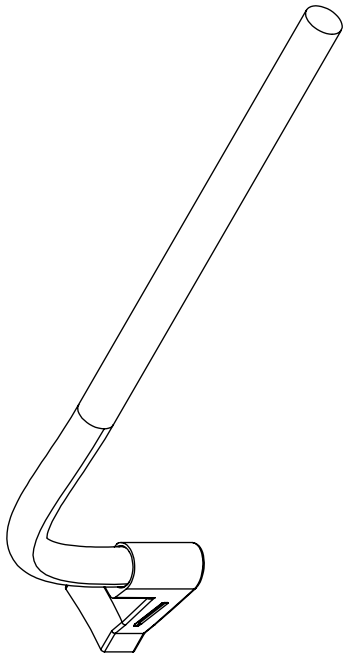

Item	P/N	Desciption	Qty
	S.115.2059.0	ASSY MAIN SUCTION HOSE	
1	115.0059.0	[MCH 211-311] (101)MAIN SUCTION HOSE	1
2	115.2201.0	SQUEEGEE HOSE CONNECTOR L36	1

TOLERANCE UNSPECIFIED		REMARK:							
LINE	ANGLE								
.XXX=±0.005 .XX=±0.05 .X=±0.1 .=±0.2 XX=±0.5 XXX=±1	X=±2° .X=±1.5° .XX=±1° .XXX=±0.5°	MATERIAL							
		APPROVED	CHECKED	DESIGNED	REV.	-	PART NAME	KIT ASSY IMOP 36 BASIC ITEAM W/O I-POWER	
				Yang	UNIT	MM	PART NO.	K1.IMP36N.FCT.0	FRAME SIZE
SHEET OF	DATE			2025/5/29	SCALE	1 : 5	DRAWING NO.		A4

SMT-FCT DONGGUAN
THE FRIENDLY FAMILY

东莞硕能塑胶模具有限公司

ASSEMBLY AND MOULD OF CLEANING PRODUCTS

REV.	DESCRIPTION	REVISED BY	DATE
A		Yang	29/5/2025

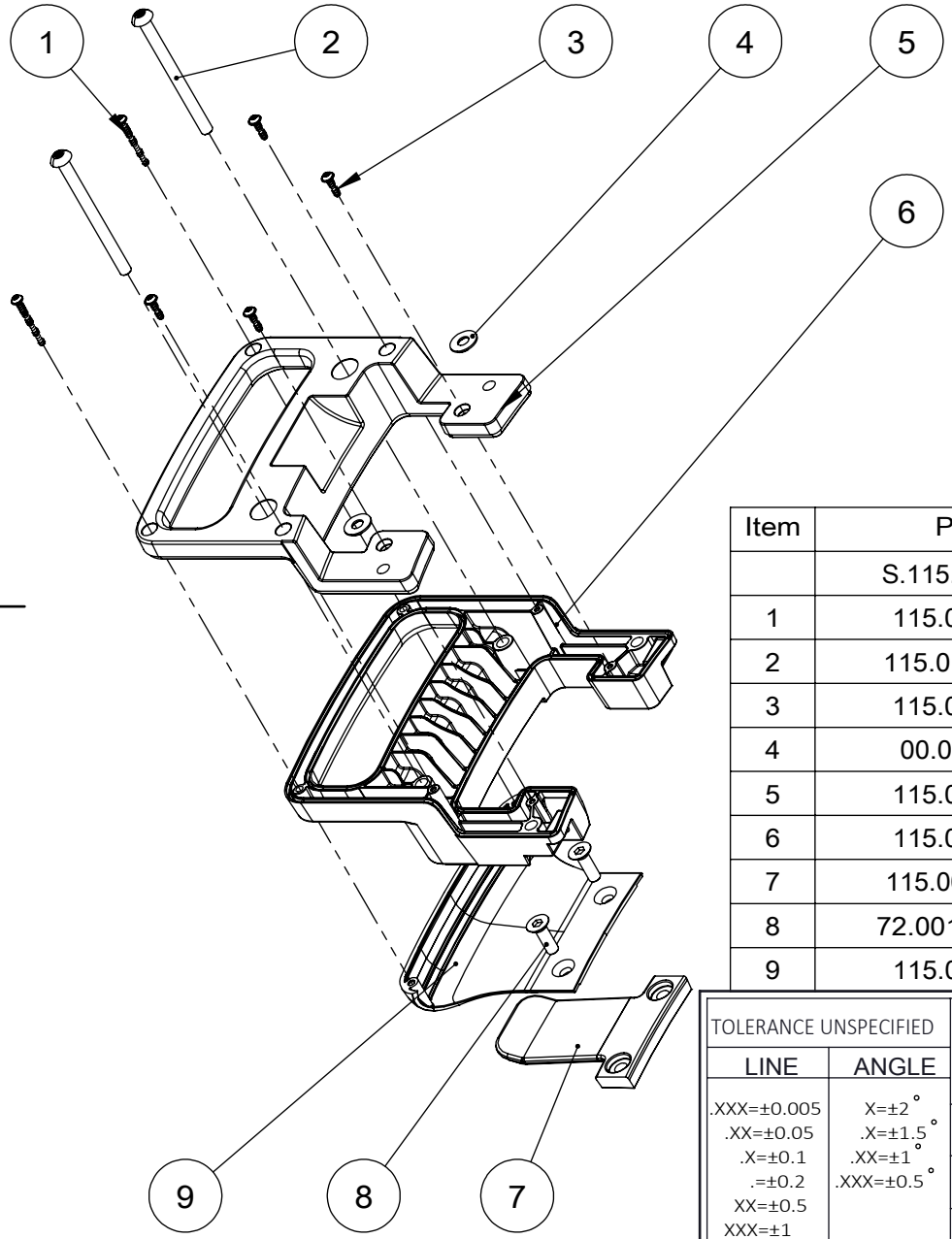

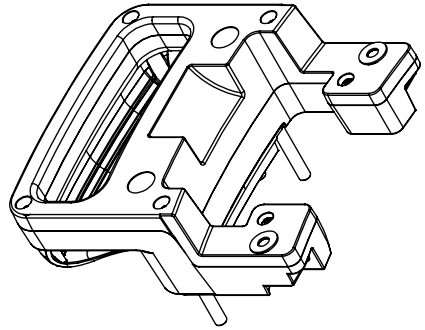

Item	P/N	Desciption	Qty
	S.115.0160.0	FLOOR UNIT HANDLE GRIP	
1	115.0184.1	EJOT PT SCREW WN 5452 30X25	2
2	115.0178.0A	(013-116) [101] SOCKET HEAD CAP SCREW TORX M5 x 65	2
3	115.0011.0	(MCH 011-101) [101] EJOT PT SCREW WN 5451 30X10	4
4	00.0091.0	WASHER STAINLESS M5 5.1X12X1.0	2
5	115.0160.0	FLOOR UNIT HANDLE GRIP TOP BLACK	1
6	115.0161.0	FLOOR UNIT HANDLE GRIP BOTTOM BLACK	1
7	115.0045.0E	FLOOR UNIT BATTERY PACK CLIP BLACK	1
8	72.0014.3N/1	NYLOK SCREW COUNTER SUNK BOLT M5X18.5	2
9	115.0376.0	LIFTING HANDLE BAFFLE BLACK	1

TOLERANCE UNSPECIFIED		REMARK:							
LINE	ANGLE								
.XXX=±0.005 .XX=±0.05 .X=±0.1 .=±0.2 XX=±0.5 XXX=±1	X=±2° .X=±1.5° .XX=±1° .XXX=±0.5°	MATERIAL			SMT–FCT DONGGUAN THE FRIENDLY FAMILY 东莞硕能塑胶模具有限公司 ASSEMBLY AND MOULD OF CLEANING PRODUCTS				
		APPROVED	CHECKED	DESIGNED	REV.	-	PART NAME	KIT ASSY IMOP 36 BASIC ITEAM W/O I-POWER	
				Yang	UNIT	MM	PART NO.	K1.IMP36N.FCT.0	FRAME SIZE
SHEET OF	DATE			2025/5/29	SCALE	1 : 3	DRAWING NO.		A4

REV.	DESCRIPTION	REVISED BY	DATE
A		Yang	29/5/2025

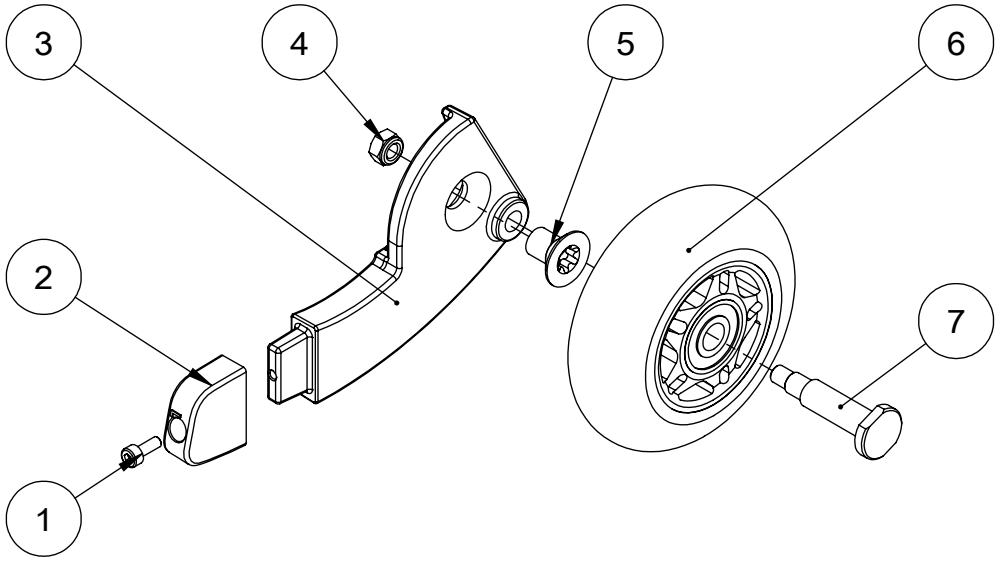

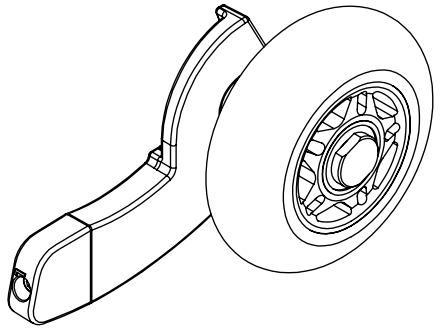

Item	P/N	Desciption	Qty
	S.115.0030.357	ASSY TRANSPORT WHEEL PILLAR LEFT	
1	115.0037.1	CYLINDER ROUND HEAD CAP SCREW M3 x 8 SUS304	1
2	115.0266.36	TRANSPORT WHEEL PILLAR COVER SILVER RAL 9006 RIGHT	1
3	115.0030.357G	[MCH-211-266](108)TRANSPORT WHEEL PILLAR LEFT P431C DUTCH AKSU TREATMENT	1
4	04.0048.0	NUT M5 NYLON STAINLESS	1
5	115.0177.0	(013-107) [101]COUNTER SUNK BOLT M8 x 12	1
6	72.0029.2/797	[MCH211-264] (101) WHITE CASTOR + BLUE BRACKET	1
7	115.0199.0C	[MCH211-267][104] TRANSPORT CASTOR AXIS I-MOPLITE	1

TOLERANCE UNSPECIFIED		REMARK:			SMT-FCT DONGGUAN THE FRIENDLY FAMILY				
LINE	ANGLE				东莞硕能塑胶模具有限公司				
.XXX=±0.005 .XX=±0.05 .X=±0.1 .=±0.2 XX=±0.5 XXX=±1	X=±2° .X=±1.5° .XX=±1° .XXX=±0.5°	MATERIAL			ASSEMBLY AND MOULD OF CLEANING PRODUCTS				
		APPROVED	CHECKED	DESIGNED	REV.	-	PART NAME	KIT ASSY IMOP 36 BASIC ITEAM W/O I-POWER	
				Yang	UNIT	MM	PART NO.	K1.IMP36N.FCT.0	FRAME SIZE
SHEET OF	DATE			2025/5/29	SCALE	1 : 2	DRAWING NO.		A4

REV.	DESCRIPTION	REVISED BY	DATE
A		Yang	29/5/2025

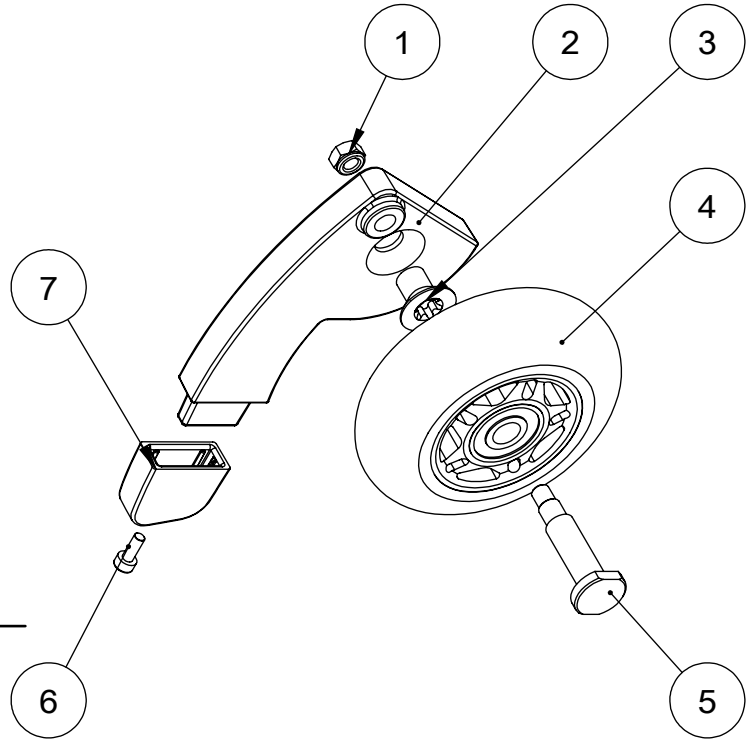

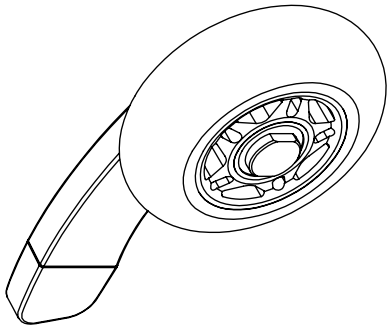

Item	P/N	Desciption	Qty
	S.115.0031.357	ASSY TRANSPORT WHEEL PILLAR RIGHT	
1	04.0048.0	NUT M5 NYLON STAINLESS	1
2	115.0031.357G	[MCH-211-265](108)TRANSPORT WHEEL PILLAR RIGHT P431C DUTCH AKSU TREATMENT	1
3	115.0177.0	(013-107) [101]COUNTER SUNK BOLT M8 x 12	1
4	72.0029.2/797	[MCH211-264] (101) WHITE CASTOR + BLUE BRACKET	1
5	115.0199.0C	[MCH211-267][104] TRANSPORT CASTOR AXIS I-MOPLITE	1
6	115.0037.1	CYLINDER ROUND HEAD CAP SCREW M3 x 8 SUS304	1
7	115.0265.36	TRANSPORT WHEEL PILLAR COVER SILVER RAL 9006 LEFT	1

TOLERANCE UNSPECIFIED		REMARK:			SMT-FCT DONGGUAN THE FRIENDLY FAMILY				
LINE	ANGLE				东莞硕能塑胶模具有限公司				
.XXX=±0.005 .XX=±0.05 .X=±0.1 .=±0.2 XX=±0.5 XXX=±1	X=±2° .X=±1.5° .XX=±1° .XXX=±0.5°	MATERIAL			ASSEMBLY AND MOULD OF CLEANING PRODUCTS				
		APPROVED	CHECKED	DESIGNED	REV.	-	PART NAME	KIT ASSY IMOP 36 BASIC ITEAM W/O I-POWER	
				Yang	UNIT	MM	PART NO.	K1.IMP36N.FCT.0	FRAME SIZE
SHEET OF	DATE			2025/5/29	SCALE	1 : 2	DRAWING NO.		A4

REV.	DESCRIPTION	REVISED BY	DATE
A		Yang	29/5/2025

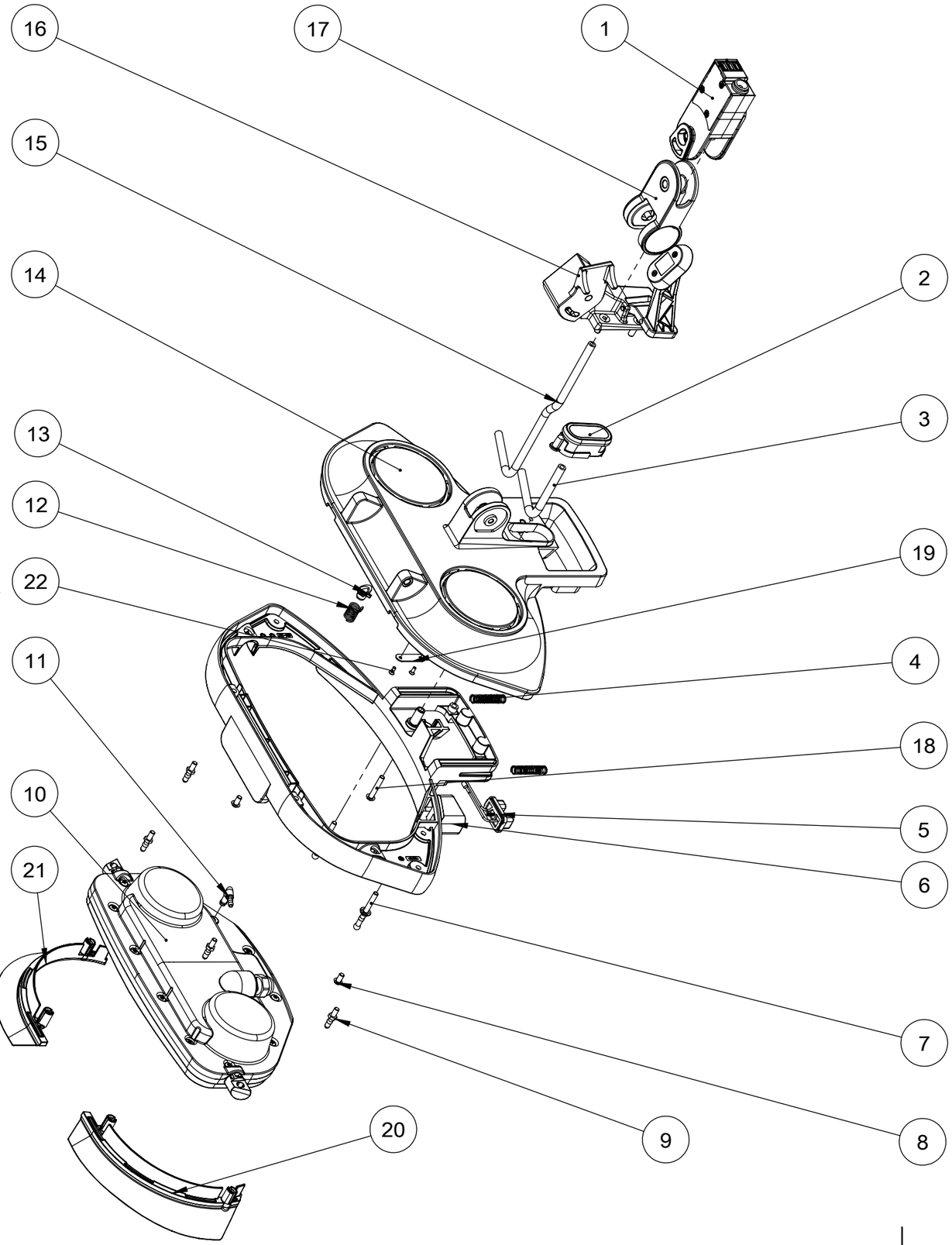

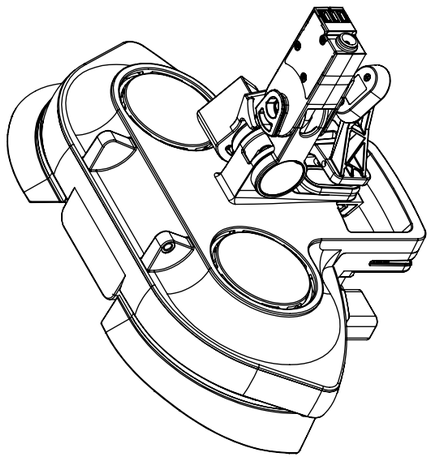

Item	P/N	Desciption	Qty
	S.115.3041.357	ASSY DECK L36	
1	S.115.0413.357	ASSY JOINT PART L36	1
2	S.115.1159.8	MAGNET HOUSINGPARKING ASSY i-MOP 36	1
3	115.0461.0	TENSION SPRING ID8.4xOD10M	1
4	115.0042.0A	[MCH 043-104 [102] COMPRESSION SPRING 7X9X45.5	2
5	S.115.1028.357	ASSY SPRING CONTACT PCB L36	1
6	115.0026.2I	(MCH 211-031] [110] PROTECTION BUMPER	1
7	115.0044.0B	(MCH 211-275] [103] SQUEEGEE FIXATION PIN	2
8	115.0095.0	[MCH 013-105] (101) CYLINDER ROUND HEAD CAP SCREW M5X12	2
9	115.0173.0A	[MCH-211-278](102) SPLASING PROTECTION FIXATION PIN	4
10	S.115.1408.357	ASSEMBLY DRIVE UIT L36 PLANET GEARBOX MOTOR	1
11	115.0024.357C	(MCH 211-156) [104]DRIVE MODULE WATER COUPLING GREY P431C	1
12	115.0046.1	MCH 211-332(101) FLOOR UNIT SPRING	1
13	115.0047.0E	(MCH 211-237] [106] FLOOR UNIT SPRIN	1
14	115.2041.357	FLOOR UNIT MAIN COVER GREY L36	1
15	R.106.2190.8	CUTTING L=0.3M SILICON TUBE 8X4.5	1
16	S.115.0307.357B	SUPPORT SYSTEM COMPLETE L36	1
17	S.115.1052.3	57 ASSY JOINT LOWER PART L36	1
18	115.0043.0	(MCH 013-106] [101]CYLINDER ROUND HEAD CAP SCREW M5X30	1
19	115.0171.0A	(MCH 211-262] [102] CABLE HOLDER PLATE	1
20	115.0322.0D	MCH 211-051-105 SPLASH PROTECTION LEFT NEW STRUCTURE	1
21	115.0323.0D	MCH 211-052-105 SPLASH PROTECTION RIGHT NEW STRUCTURE	1
22	115.0037.0	(MCH 013-109 [101] COUNTERSUNK HEAD SCREW TORX M3X8	2

TOLERANCE UNSPECIFIED

LINE	ANGLE
.XXX=±0.005 .XX=±0.05 .X=±0.1 .=±0.2 XX=±0.5 XXX=±1	X=±2° .X=±1.5° .XX=±1° .XXX=±0.5°

SHEET OF | DATE

REMARK:

MATERIAL

APPROVED	CHECKED	DESIGNED	REV.		PART NAME	KIT ASSY IMOP 36 BASIC ITEAM W/O I-POWER	
		Yang	UNIT	MM	PART NO.	K1.IMP36N.FCT.0	FRAME SIZE
		2025/5/29	SCALE	1 : 5	DRAWING NO.		A3

SMT-FCT DONGGUAN
THE FRIENDLY FAMILY
东莞硕能塑胶模具有限公司
ASSEMBLY AND MOULD OF CLEANING PRODUCTS

REV.	DESCRIPTION	REVISED BY	DATE
A		Yang	29/5/2025

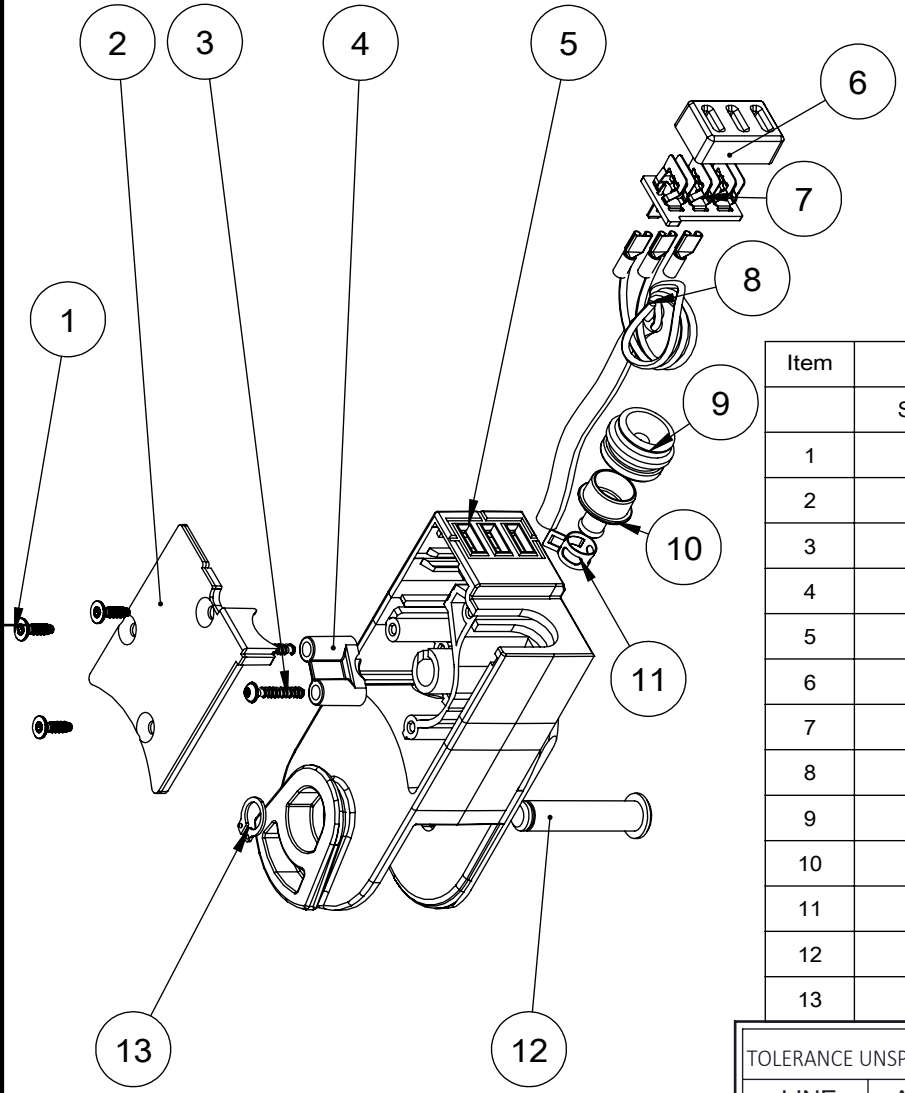

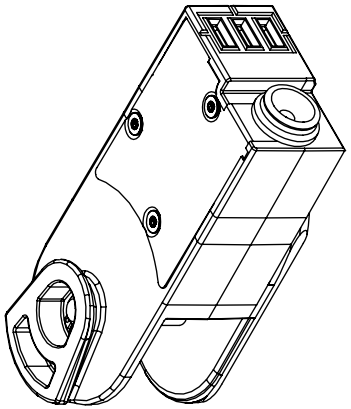

Item	P/N	Desciption	Qty
	S.115.0413.357	ASSY JOINT PART L36	
1	72.0240.2	HEXALOBULAR SOCKET COUNTERSUNK HEAD SELFTAPPING SCREW ST3X10	3
2	139.0025.357	COVER JOINT UPPER PART	1
3	115.0184.0	[MCH 011-103-101] EJOT PT SCREW WN 5452 30X16	2
4	139.0026.357	STRAIN RELIEF JOINT UPPER PART	1
5	115.0413.357	HINGE i-MOP 36 GREY P431C	1
6	139.0021.357	SPACER CONTACTS	1
7	139.0022.0	PCB JOINT	1
8	S.115.0424.0	CABLE IN HINGE L36	1
9	139.0008.0	TOP UNIT ADAPTOR SEALING PLUG	1
10	139.0024.357	PLUG-IN VALVE	1
11	139.0109.0	HOSE CLAMP STAINLESS STEEL Ø8 WIRE DIA.Ø1.0	1
12	139.0027.0	TOP AXIS JOINT	1
13	115.0186.0	[MCH 211-031-101] CIRCLIP EXTERNAL 10.0 STAINLESS STEEL	1

TOLERANCE UNSPECIFIED		REMARK:			SMT-FCT DONGGUAN THE FRIENDLY FAMILY				
LINE	ANGLE				东莞硕能塑胶模具有限公司				
.XXX=±0.005 .XX=±0.05 .X=±0.1 .=±0.2 XX=±0.5 XXX=±1	X=±2° .X=±1.5° .XX=±1° .XXX=±0.5°	MATERIAL			ASSEMBLY AND MOULD OF CLEANING PRODUCTS				
		APPROVED	CHECKED	DESIGNED	REV.	-	PART NAME	KIT ASSY IMOP 36 BASIC ITEAM W/O I-POWER	
				Yang	UNIT	MM	PART NO.	K1.IMP36N.FCT.0	FRAME SIZE
SHEET OF	DATE			2025/5/29	SCALE	1 : 2	DRAWING NO.		A4

REV.	DESCRIPTION	REVISED BY	DATE
A		Yang	29/5/2025

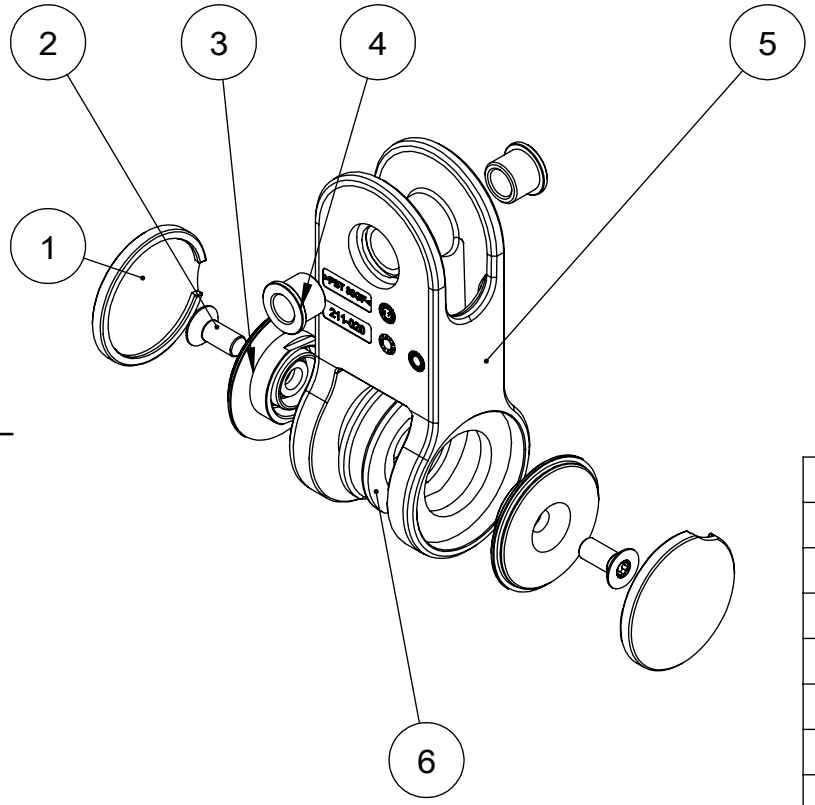

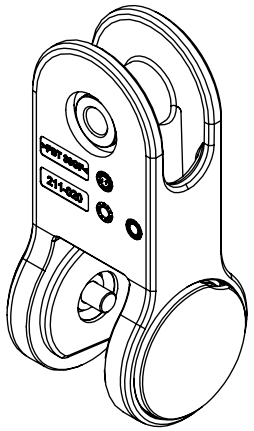

Item	P/N	Desciption	Qty
	S.115.1052.357	ASSY JOINT LOWER PART L36	
1	115.0180.0B	[MCH 211-231-103] MAIN HINGE COVE	2
2	115.0172.0	[MCH-013-107](101) SCREW M6X14	2
3	115.0056.0A	[MCH 211-221](102)FLOOR UNIT BEARING BUSH	2
4	115.0053.0A	(MCH 211-210] [102] MAIN HINGE BEARING BUSH	2
5	115.1052.357	JOINT LOWE PART L36	1
6	115.0057.0A	[MCH 211-220](102) FLOOR UNIT BEARING DISC	2

TOLERANCE UNSPECIFIED		REMARK:							
LINE	ANGLE								
.XXX=±0.005 .XX=±0.05 .X=±0.1 .=±0.2 XX=±0.5 XXX=±1	X=±2° .X=±1.5° .XX=±1° .XXX=±0.5°	MATERIAL							
		APPROVED	CHECKED	DESIGNED	REV.	-	PART NAME	KIT ASSY IMOP 36 BASIC ITEAM W/O I-POWER	
				Yang	UNIT	MM	PART NO.	K1.IMP36N.FCT.0	FRAME SIZE
SHEET OF	DATE			2025/5/29	SCALE	1 : 2	DRAWING NO.		A4

SMT-FCT DONGGUAN
THE FRIENDLY FAMILY

东莞硕能塑胶模具有限公司

ASSEMBLY AND MOULD OF CLEANING PRODUCTS

REV.	DESCRIPTION	REVISED BY	DATE
A		Yang	29/5/2025

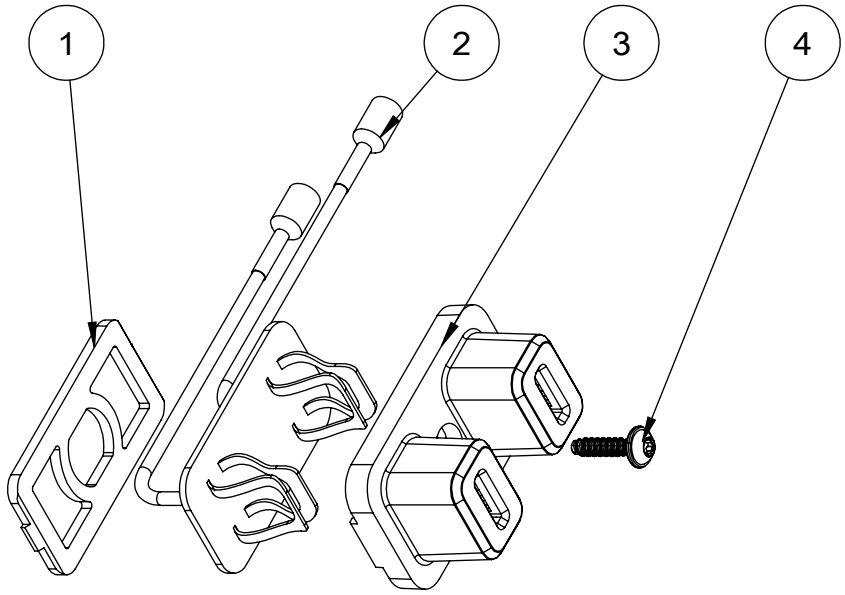

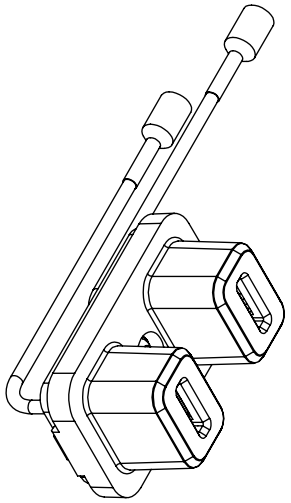

Item	P/N	Desciption	Qty
	S.115.1028.357	ASSY SPRING CONTACT PCB L36	
1	115.0029.357B	(MCH 211-217 [103]SPRING CONTACT FRAME GREY P431C (3.8X2.5X0.3CM)	1
2	S.115.1027.0B	SPRING CONTACT PCB L36	1
3	115.0028.357C	(MCH 211-216 [104] SPRING CONTACT HOUSING GREY P431C	1
4	115.0011.0	(MCH 011-101) [101] EJOT PT SCREW WN 5451 30X10	1

TOLERANCE UNSPECIFIED		REMARK:							
LINE	ANGLE								
.XXX=±0.005 .XX=±0.05 .X=±0.1 .=±0.2 XX=±0.5 XXX=±1	X=±2° .X=±1.5° .XX=±1° .XXX=±0.5°	MATERIAL							
		APPROVED	CHECKED	DESIGNED	REV.	-	PART NAME	KIT ASSY IMOP 36 BASIC ITEAM W/O I-POWER	
				Yang	UNIT	MM	PART NO.	K1.IMP36N.FCT.0	FRAME SIZE
SHEET OF	DATE			2025/5/29	SCALE	1 : 1	DRAWING NO.		A4

SMT-FCT DONGGUAN
THE FRIENDLY FAMILY

东莞硕能塑胶模具有限公司

ASSEMBLY AND MOULD OF CLEANING PRODUCTS

REV.	DESCRIPTION	REVISED BY	DATE
A		Yang	29/5/2025

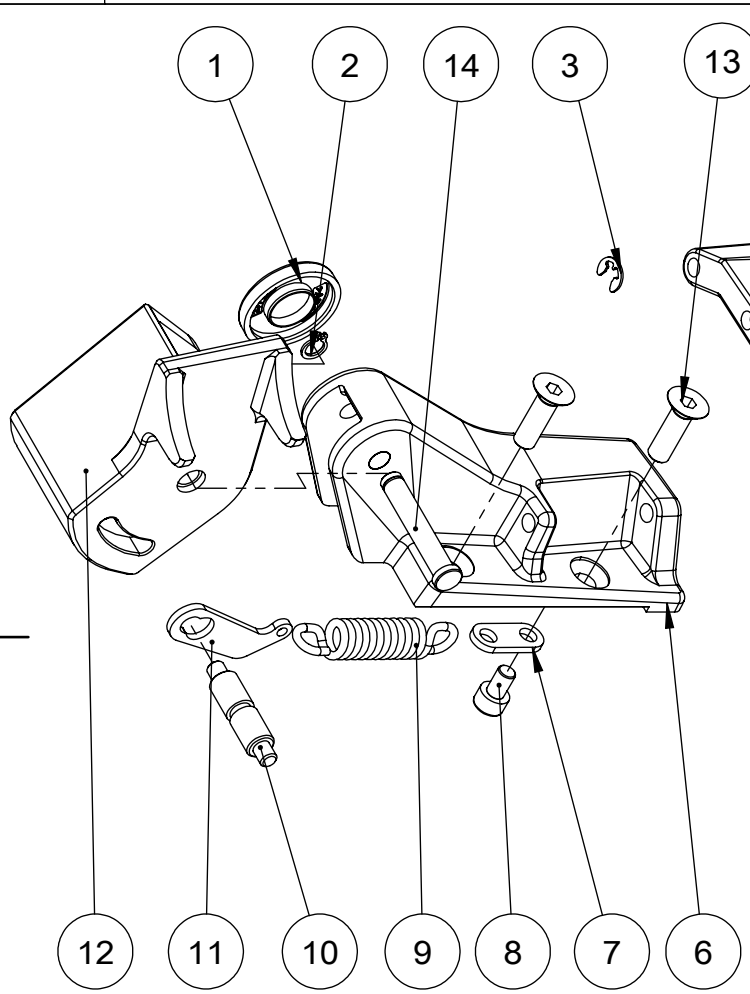

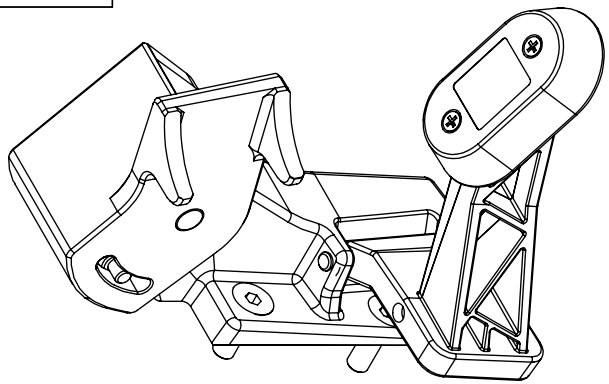

Item	P/N	Desciption	Qty
	S.115.0307.357B	SUPPORT SYSTEM COMPLETE L36	
1	115.0308.0A	[MCH 211-375](102)SUPPORT SYSTEM COVER PAINTED COLOR PSEH-634B	1
2	115.0304.0	[MCH 031-103](101)CIRCLIP EXTERNAL 6.0 GB/T 894.1-1986	1
3	115.0303.0	[MCH 031-101](101) CIRCLIP EXTERNAL 4.0 GB/T 896-1986	1
4	S.115.1305.357	SUPPORT SYSTEM LEVER ASSY iMOP 36	1
5	115.0294.0	[MCH 211-381](101) SUPPORT SYSTEM BRACKET SHAFT	1
6	115.0307.357B	SUPPORT SYSTEM BRACKET COMPLETE I36 GREY P431C	1
7	115.0298.0	[MCH 211-385](101) SUPPORT SYSTEM SPRING SUPPORT	1
8	115.0302.0	[MCH 013-139](101) HEX SOCKET BOLT M5x8 GB/T 70.1-2006 STAINLESS STEEL	1
9	115.0299.0	[MCH 043-107](101)EXTENSION SPRING 2.20 X 48.0	1
10	115.0296.0	[MCH 211-383](101) SUPPORT SYSTEM SPRING AXIS	1
11	115.0297.0	[MCH 211-384](101) SUPPORT SYSTEM SPRING CONNECTOR	1
12	115.0309.357A	[MCH 211-376](102)SUPPORT SYSTEM HOLDER GREY P431C	1
13	72.0033.2	COUNTER SUNK HEAD CAP SCREW M6X20 WITH NYLOK SCREW	2
14	115.0295.0	[MCH 211-382](101) SUPPORT SYSTEM HOLDER SHAFT	1

TOLERANCE UNSPECIFIED		REMARK:			SMT-FCT DONGGUAN THE FRIENDLY FAMILY				
LINE	ANGLE				东莞硕能塑胶模具有限公司				
.XXX=±0.005 .XX=±0.05 .X=±0.1 .=±0.2 XX=±0.5 XXX=±1	X=±2° .X=±1.5° .XX=±1° .XXX=±0.5°	MATERIAL			ASSEMBLY AND MOULD OF CLEANING PRODUCTS				
		APPROVED	CHECKED	DESIGNED	REV.	-	PART NAME	KIT ASSY IMOP 36 BASIC ITEAM W/O I-POWER	
				Yang	UNIT	MM	PART NO.	K1.IMP36N.FCT.0	FRAME SIZE
SHEET OF	DATE			2025/5/29	SCALE	1 : 2	DRAWING NO.		A4

REV.	DESCRIPTION	REVISED BY	DATE
A		Yang	29/5/2025

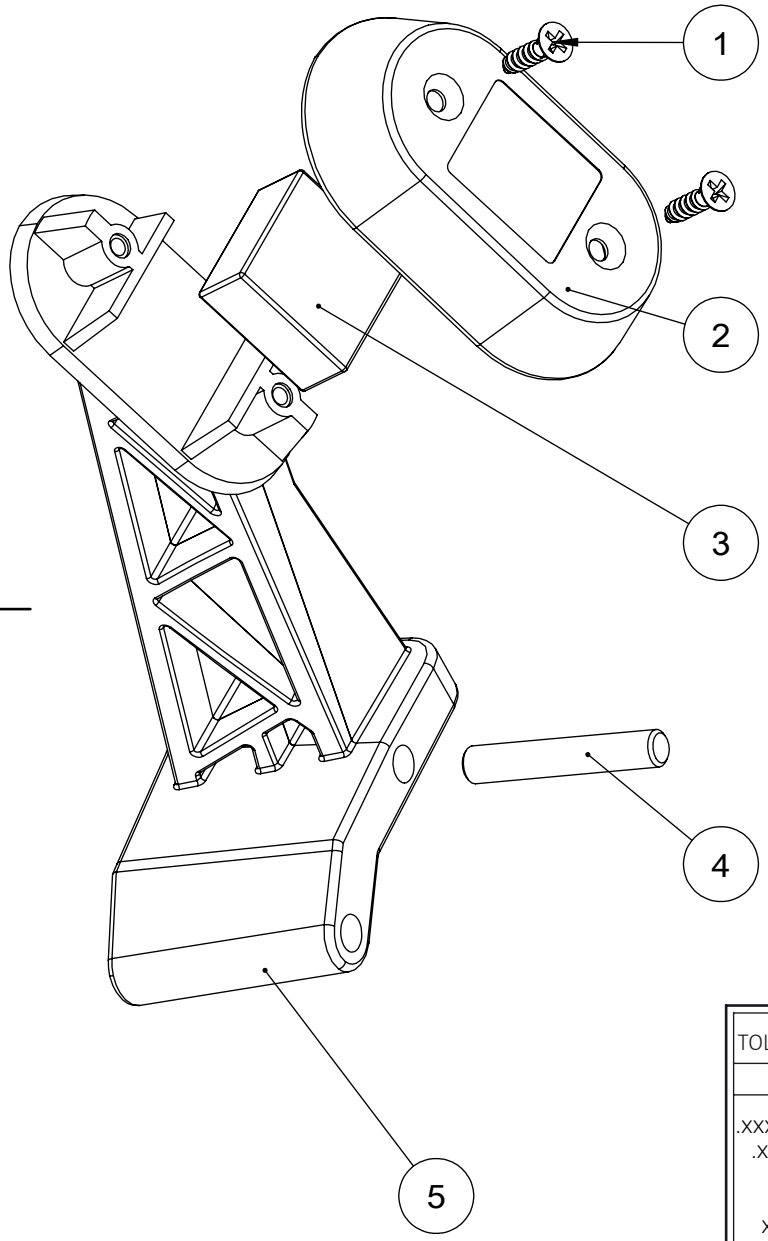

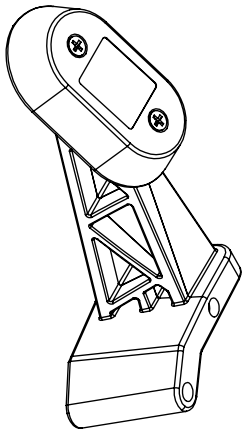

Item	P/N	Desciption	Qty
	S.115.1305.357	SUPPORT SYSTEM LEVER ASSY i-MOP 36	
1	72.0201.0	SCREW ST3 x10 COUNTER SUNK	2
2	115.0306.8	[MCH 211-378](101)SUPPORT SYSTEM CAP YELLOW P122C	1
3	72.0053.0	MAGNET TOP UNIT SMALL 20X20X10MM [MCH 1416-1001-2172]	1
4	115.0293.0A	[MCH 211-380](102) SUPPORT SYSTEM LEVER AXIS	1
5	115.1305.357	SUPPORT SYSTEM LEVER GREY P431C i-MOP 36	1

TOLERANCE UNSPECIFIED		REMARK:			SMT-FCT DONGGUAN THE FRIENDLY FAMILY				
LINE	ANGLE				东莞硕能塑胶模具有限公司				
.XXX=±0.005 .XX=±0.05 .X=±0.1 .=±0.2 XX=±0.5 XXX=±1	X=±2° .X=±1.5° .XX=±1° .XXX=±0.5°	MATERIAL			ASSEMBLY AND MOULD OF CLEANING PRODUCTS				
		APPROVED	CHECKED	DESIGNED	REV.	-	PART NAME	KIT ASSY IMOP 36 BASIC ITEAM W/O I-POWER	
				Yang	UNIT	MM	PART NO.	K1.IMP36N.FCT.0	FRAME SIZE
SHEET OF	DATE			2025/5/29	SCALE	1 : 1	DRAWING NO.		A4

REV.	DESCRIPTION	REVISED BY	DATE
A		Yang	29/5/2025

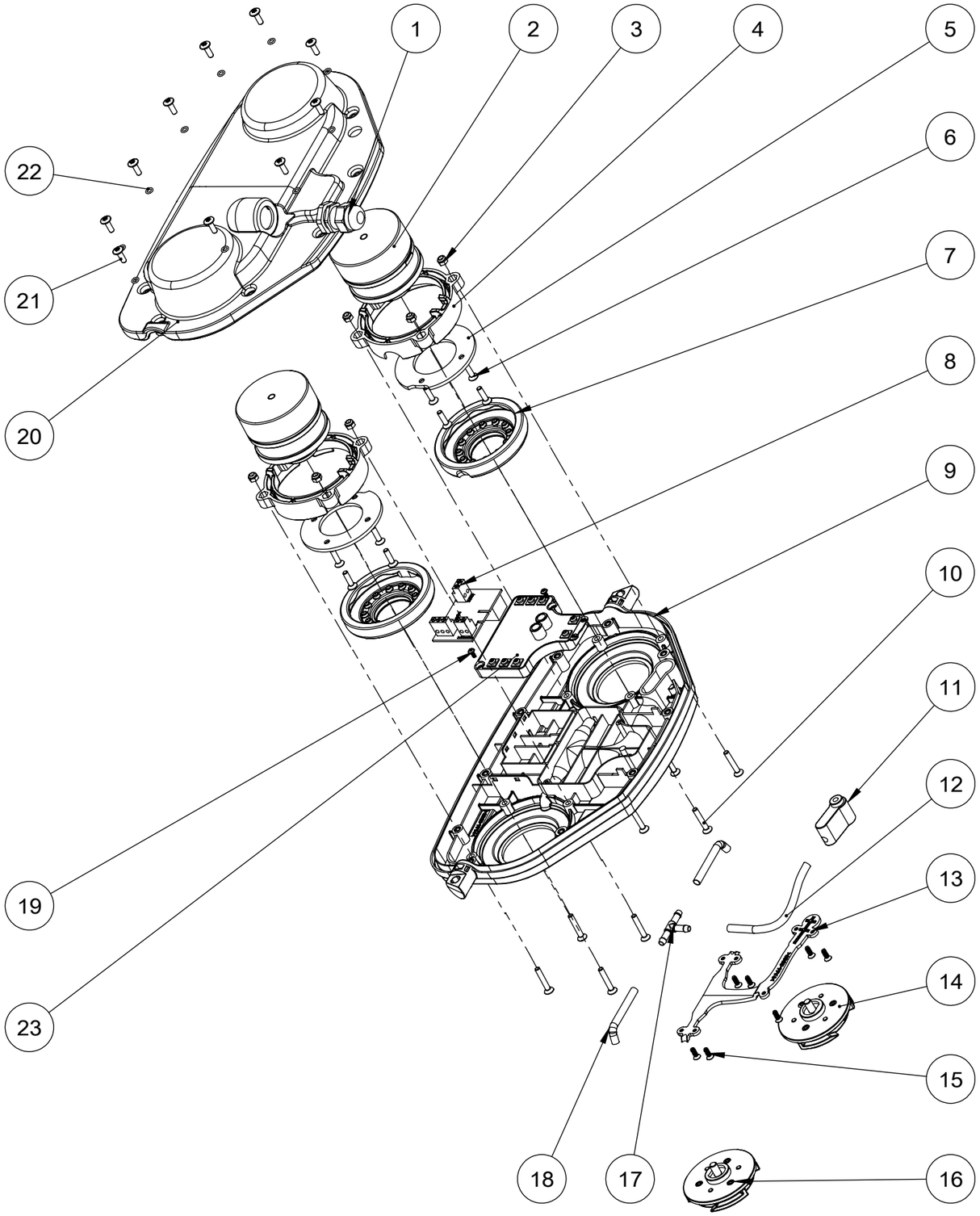

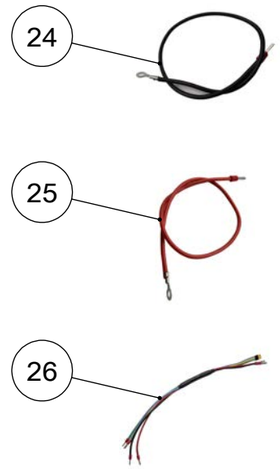

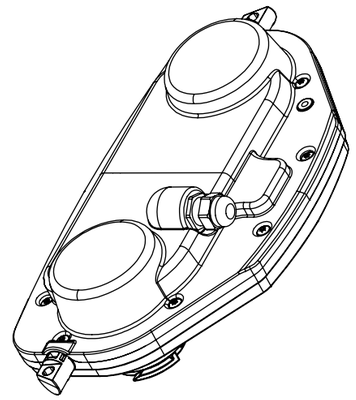

Item	P/N	Desciption	Qty
	S.115.1408.357	ASSEMBLY DRIVE UIT L36 PLANET GEARBOX MOTOR	
1	115.0433.0	CABLE JOINT WATERPROOF PG11	1
2	115.0428.0	BRUSHLESS MOTOR WITH PLANET GEARBOX 150W 14-21V	2
3	72.0261.0	NUT M4 NYLON STAINLESS	8
4	115.0429.357	BRUSH MOTOR FIXING RING PLANET GEARBOX	2
5	115.0430.357	BRUSH MOTOR DAMPING FLANGE PLANET GEARBOX	2
6	115.0013.1	HEXALOBULAR SOCKET COUNTERSUNK HEAD SCREW M4X16 WITH THREADLOCKER	8
7	115.0432.0	BRUSH MOTOR DAMPING RUBBER RING PLANET GEARBOX	2
8	72.0765.0A	RELAY PCB BOMA WITH LED SOCKET	1
9	115.1408.357	BRUSH MOTOR HOUSING BOTTOM PLANET GEARBOX	1
10	115.0002.0	(MCH 013-102) [101] COUNTER SUNK BOLT M4X25	8
11	115.0021.0A	(MCH 211-158) [102] DRIVE MODULE RUBBER COUPLING	1
12	115.0022.1	(MCH 211-161) [101] DRIVE MODULE HOSE EXTERNAL	1
13	115.0431.357	COVE WATER CHANNEL PLANET GEARBOX	1
14	S.115.2017.357	BRUSH COUPLING CCW (RIGHT) LOCKER ASSY	1
15	72.0240.2	HEXALOBULAR SOCKET COUNTERSUNK HEAD SELFTAPPINGSCREW ST3X10	7
16	S.115.2016.357	BRUSH COUPLING CW (LEFT) LOCKER ASSY	1
17	115.0434.0	HOSE T-COUPLING 6-6-6	1
18	115.0022.2	(MCH 211-161) [101] DRIVE MODULE HOSE EXTERN	2
19	115.0275.0	[MCH-011-105](101) EJOT PT SCREW WN 5451 25X6	2
20	115.1407.357	BRUSH MOTOR HOUSING TOP PLANET GEARBOX	1
21	115.0426.0	NYLON SCREW M4X12 CYLINDER ROUND HEAD STARDARD THREAD SST	10
22	115.0276.0	[MCH-029-](101) O-RING 4.00X1.2	10
23	115.0419.1	BRUSHLESS MOTOR CONTROL PCB ONE-TO-TWO	1
24	115.0421.0	CABLE " -" 16AWG BLACK RELAT PCB TO CONTROL PCB	1
25	115.0421.1	CABLE " +" 16AWG RED RELAT PCB TO CONTROL PCB	1
26	S.115.1422.0	CABLE HARNESS 5P PLANET GEAR DRIVE MOTOR UNIT OUTPUT	1

TOLERANCE UNSPECIFIED		REMARK:			SMT-FCT DONGGUAN THE FRIENDLY FAMILY			
LINE	ANGLE				东莞硕能塑胶模具有限公司			
.XXX=±0.005 .XX=±0.05 .X=±0.1 .=±0.2 XX=±0.5 XXX=±1	X=±2° .X=±1.5° .XX=±1° .XXX=±0.5°	MATERIAL			ASSEMBLY AND MOULD OF CLEANING PRODUCTS			
		APPROVED	CHECKED	DESIGNED	REV.		PART NAME	KIT ASSY IMOP 36 BASIC ITEAM W/O I-POWER
				Yang	UNIT	MM	PART NO.	K1.IMP36N.FCT.0
SHEET OF	DATE			2025/5/29	SCALE	1 : 4	DRAWING NO.	

FRAME SIZE: A3

REV.	DESCRIPTION	REVISED BY	DATE
A		Yang	29/5/2025

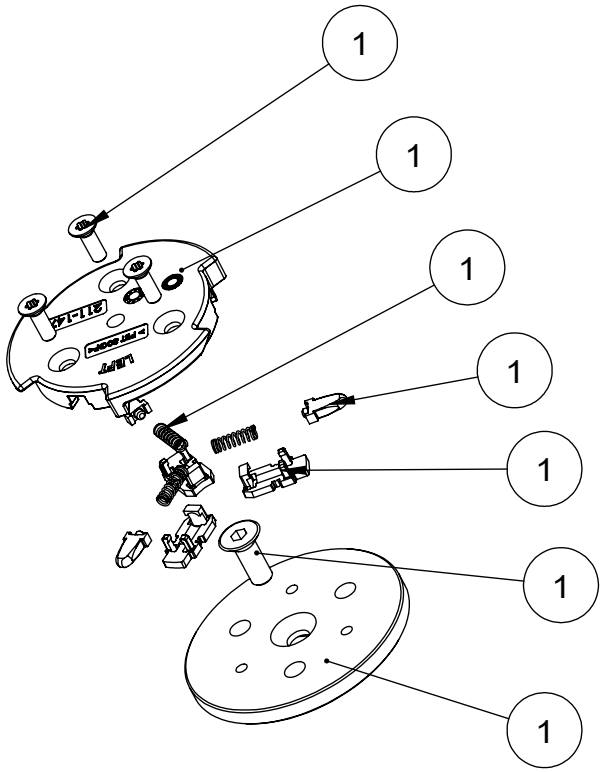

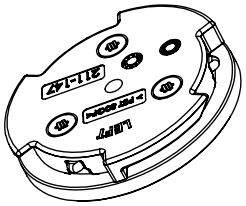

Item	P/N	Desciption	Qty
	S.115.2016.357	BRUSH COUPLING CW (LEFT) LOCKER ASSY	
1	115.0013.0	(MCH 013-101) [101] COUNTER SUNK BOLT M4X12	3
2	115.0016.357E	(MCH 211-148) [106]BRUSH COUPLING CCW GREY P431C	1
3	115.0331.0	COMPRESSION SPRING OD3.7 x ID2.7 x L12	3
4	115.0330.357	BULB-ENDED SLIDER BRUSH LOCKER	3
5	115.0329.357	SLIDER HOUSING BRUSH LOCKER	3
6	115.0172.0	[MCH-013-107](101) SCREW M6X14	1
7	115.1018.0	PULLEY AXIS L36	1

TOLERANCE UNSPECIFIED		REMARK:							
LINE	ANGLE								
.XXX=±0.005 .XX=±0.05 .X=±0.1 .=±0.2 XX=±0.5 XXX=±1	X=±2° .X=±1.5° .XX=±1° .XXX=±0.5°	MATERIAL							
		APPROVED	CHECKED	DESIGNED	REV.	-	PART NAME	KIT ASSY IMOP 36 BASIC ITEAM W/O I-POWER	
				Yang	UNIT	MM	PART NO.	K1.IMP36N.FCT.0	FRAME SIZE
SHEET OF	DATE			2025/5/29	SCALE	1 : 2	DRAWING NO.		A4

SMT-FCT DONGGUAN
THE FRIENDLY FAMILY

东莞硕能塑胶模具有限公司

ASSEMBLY AND MOULD OF CLEANING PRODUCTS

REV.	DESCRIPTION	REVISED BY	DATE
A		Yang	29/5/2025

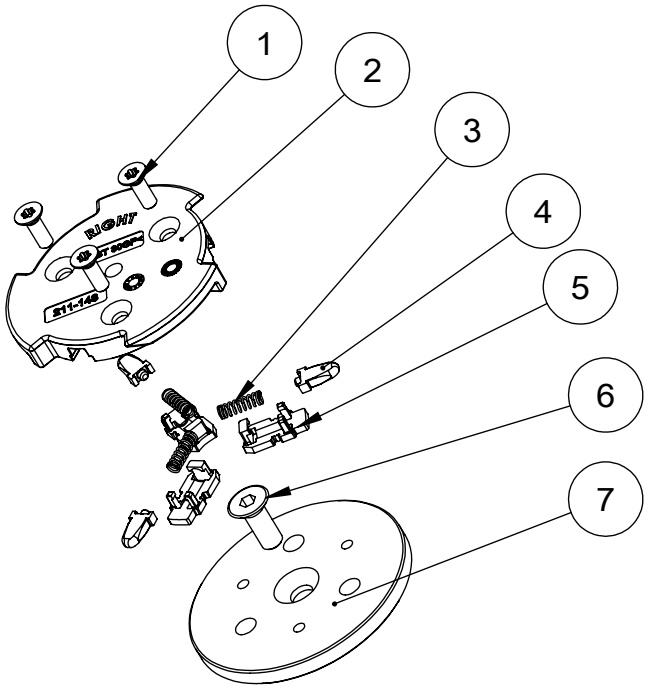

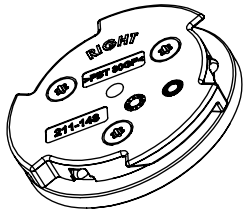

Item	P/N	Desciption	Qty
	S.115.2017.357	BRUSH COUPLING CCW (RIGHT) LOCKER ASSY	
1	115.0013.0	(MCH 013-101) [101] COUNTER SUNK BOLT M4X12	3
2	115.0017.357E	(MCH 211-148) [106]BRUSH COUPLING CCW GREY P431C	1
3	115.0331.0	COMPRESSION SPRING OD3.7 x ID2.7 x L12	3
4	115.0330.357	BULB-ENDED SLIDER BRUSH LOCKER	3
5	115.0329.357	SLIDER HOUSING BRUSH LOCKER	3
6	115.0172.0	[MCH-013-107](101) SCREW M6X14	1
7	115.1018.0	PULLEY AXIS L36	1

TOLERANCE UNSPECIFIED		REMARK:			SMT-FCT DONGGUAN THE FRIENDLY FAMILY				
LINE	ANGLE				东莞硕能塑胶模具有限公司				
.XXX=±0.005 .XX=±0.05 .X=±0.1 .=±0.2 XX=±0.5 XXX=±1	X=±2° .X=±1.5° .XX=±1° .XXX=±0.5°	MATERIAL			ASSEMBLY AND MOULD OF CLEANING PRODUCTS				
		APPROVED	CHECKED	DESIGNED	REV.	-	PART NAME	KIT ASSY IMOP 36 BASIC ITEAM W/O I-POWER	
				Yang	UNIT	MM	PART NO.	K1.IMP36N.FCT.0	FRAME SIZE
SHEET OF	DATE			2025/5/29	SCALE	1 : 2	DRAWING NO.		A4

REV.	DESCRIPTION	REVISED BY	DATE
A		Yang	29/5/2025

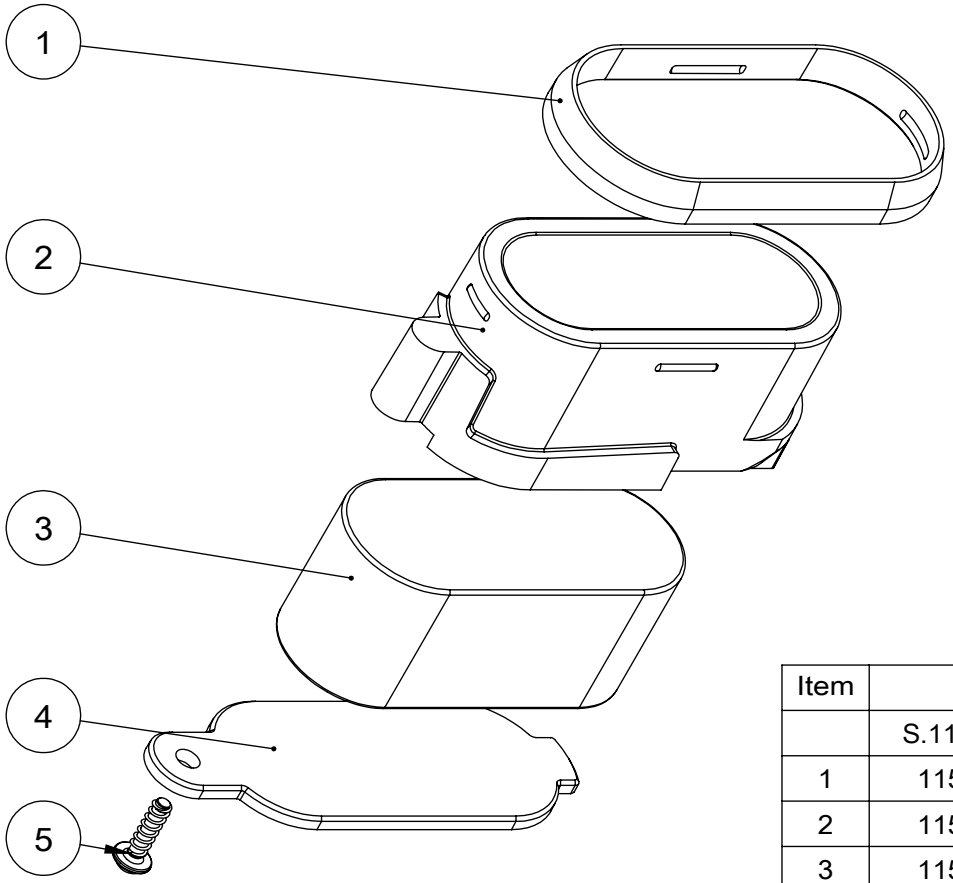

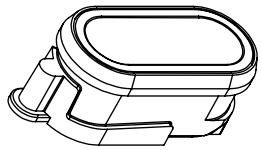

Item	P/N	Desciption	Qty
	S.115.1159.8	MAGNET HOUSING PARKING ASSY i-MOP 36	
1	115.1156.8	MAGNET HOUSING PARKING RIN	1
2	115.1158.8	MAGNET HOUSING PARKING BASE	1
3	115.1157.0	MAGNET PARKING i-MOP 36 SIZE: 5.3x2.2x2.2CM	1
4	115.1159.8	MAGNET HOUSING PARKING COVER	1
5	115.0011.0	(MCH 011-101) [101] EJOT PT SCREW WN 5451 30X10	1

TOLERANCE UNSPECIFIED		REMARK:							
LINE	ANGLE								
.XXX=±0.005 .XX=±0.05 .X=±0.1 .=±0.2 XX=±0.5 XXX=±1	X=±2° .X=±1.5° .XX=±1° .XXX=±0.5°	MATERIAL							
		APPROVED	CHECKED	DESIGNED	REV.	-	PART NAME	KIT ASSY IMOP 36 BASIC ITEAM W/O I-POWER	
				Yang	UNIT	MM	PART NO.	K1.IMP36N.FCT.0	FRAME SIZE
SHEET OF	DATE			2025/5/29	SCALE	1 : 1	DRAWING NO.		A4

SMT-FCT DONGGUAN
THE FRIENDLY FAMILY

东莞硕能塑胶模具有限公司

ASSEMBLY AND MOULD OF CLEANING PRODUCTS

REV.	DESCRIPTION	REVISED BY	DATE
A		Yang	29/5/2025

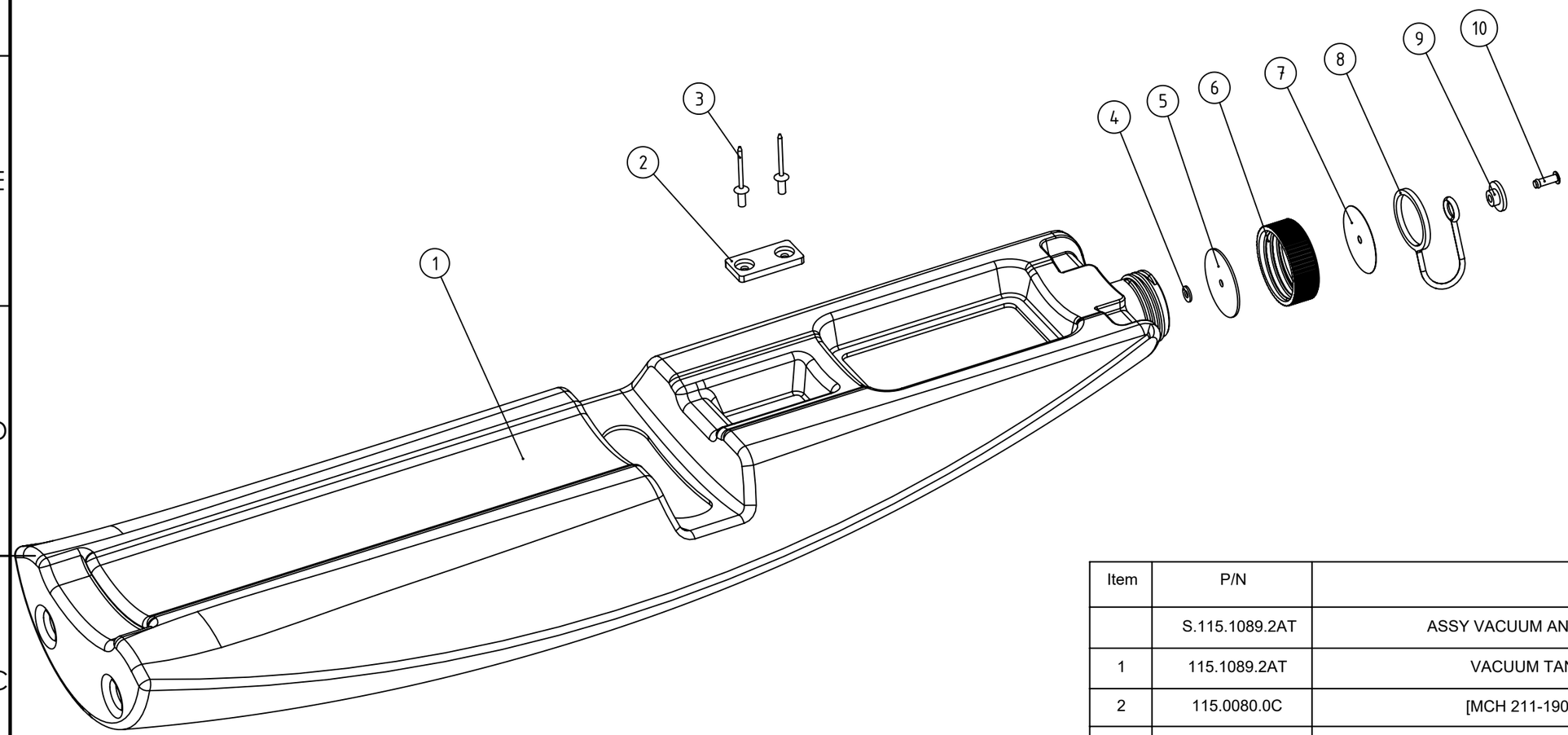

Item	P/N	Description	Qty.
	S.115.1089.2AT	ASSY VACUUM ANTIBACTERIAL WHITE TANK + PRINT	
1	115.1089.2AT	VACUUM TANK ANTIBACTERIAL WHITE	1
2	115.0080.0C	[MCH 211-190] (104) TANK HOLDER PLATE	1
3	115.0194.0	(MCH 041-102) [101] CLOSED RIVET 4X10	2
4	72.0271.0	PLASTIC WASHER 9x4x1mm	1
5	72.0265.0	SEALING GASKET CAP DIRTY TANK	1
6	72.0264.357	CAP WITHOUT HOLE Color: Grey [P431C]	1
7	89.0469.2099.25A	WARNING PLATE ON DIRTY TANK ROUND STAINLESS PLATE	1
8	72.0252.1	CAP HOLDER	1
9	72.0254.0	SLEEVE CAP HOLDER	1
10	54.0029.0	BLIND REVIT NAIL 4 X 15 MM	1

TOLERANCE UNSPECIFIED

LINE	ANGLE
.XXX=±0.005 .XX=±0.05 .X=±0.1 .=±0.2 XX=±0.5 XXX=±1	X=±2° .X=±1.5° .XX=±1° .XXX=±0.5°

REMARK:

SMT—FCT DONGGUAN
THE FRIENDLY FAMILY
东莞硕能塑胶模具有限公司
ASSEMBLY AND MOULD OF CLEANING PRODUCTS

MATERIAL							
APPROVED	CHECKED	DESIGNED	REV.		PART NAME	KIT ASSY IMOP 36 BASIC ITEAM W/O I-POWER	
		Yang	UNIT	MM	PART NO.	K1.IMP36N.FCT.0	FRAME SIZE
SHEET OF	DATE	2025/5/29	SCALE		DRAWING NO.		A3

REV.	DESCRIPTION	REVISED BY	DATE
A		Yang	29/5/2025

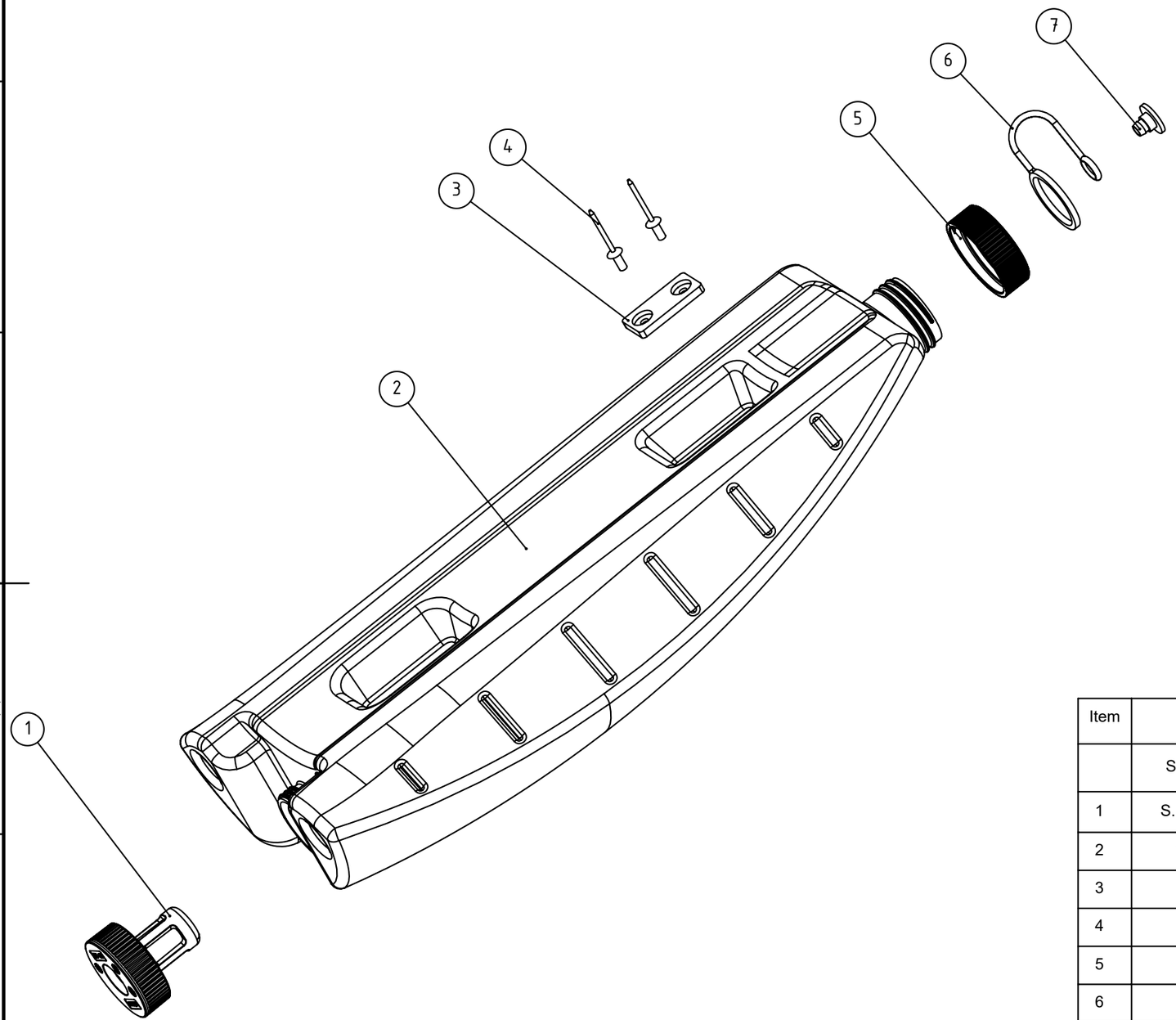

Item	P/N	Description	Qty.
	S.115.1079.0B	[MCH-211-016-103]ASSY FRESH WATER TANK + PRINT	
1	S.115.1083.357A	ASSY WATER CONNECTOR FEMALE FILTE	1
2	115.1079.0L	FRESH WATER TANK + PRINT	1
3	115.0080.0C	(104) TANK HOLDER PLATE	1
4	115.0194.0	CLOSED RIVET 4X10	2
5	72.0251.797	CAP WITH HOLE, Kleur: Blue .797 (P312C)	1
6	72.0252.1	CAP HOLDER CANVAS FILLED RUBBER	1
7	72.0254.1	SLEEVE CAP HOLDER CLEAN TANK	1

TOLERANCE UNSPECIFIED

LINE	ANGLE
.XXX=±0.005 .XX=±0.05 .X=±0.1 .=±0.2 XX=±0.5 XXX=±1	X=±2° .X=±1.5° .XX=±1° .XXX=±0.5°

REMARK:

SMT—FCT DONGGUAN
THE FRIENDLY FAMILY
东莞硕能塑胶模具有限公司
ASSEMBLY AND MOULD OF CLEANING PRODUCTS

MATERIAL							
APPROVED	CHECKED	DESIGNED	REV.		PART NAME	KIT ASSY IMOP 36 BASIC ITEAM W/O I-POWER	
		Yang	UNIT	MM	PART NO.	K1.IMP36N.FCT.0	FRAME SIZE
SHEET OF	DATE	2025/5/29	SCALE		DRAWING NO.		A3

REV.	DESCRIPTION	REVISED BY	DATE
A		Yang	29/5/2025

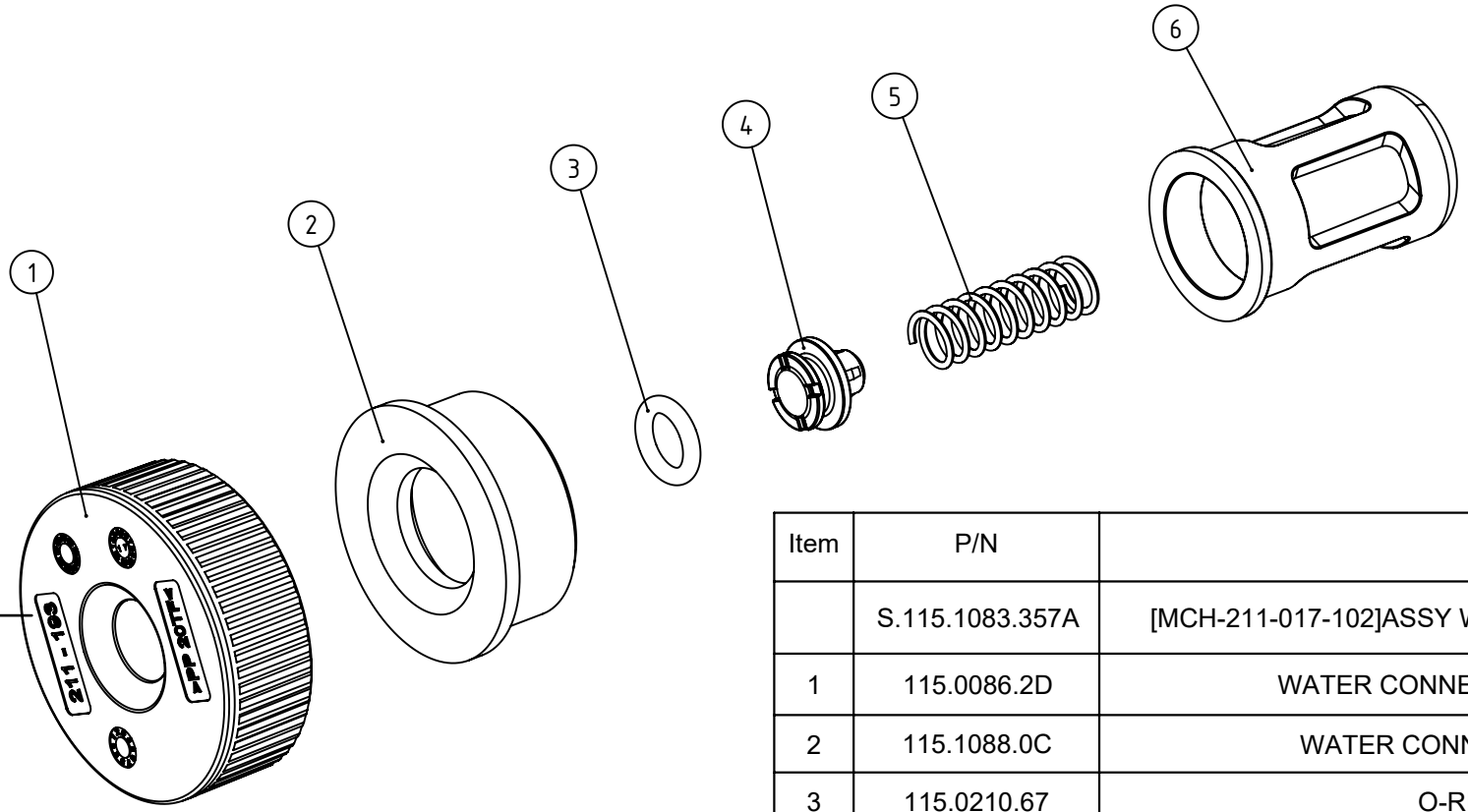

Item	P/N	Description	Qty.
	S.115.1083.357A	[MCH-211-017-102]ASSY WATER CONNECTOR FEMALE FILTE	
1	115.0086.2D	WATER CONNECTOR FEMALE CAP WHIT	1
2	115.1088.0C	WATER CONNECTOR FEMALE RUBBE	1
3	115.0210.67	O-RING 7X2.5 FKM	1
4	115.0087.0B	WATER CONNECTOR FEMALE VALVE	2
5	115.0085.0	COMPRESSION SPRING 7X9X28.5	1
6	115.0083.357D	[MCH 211-028] (105) WATER CONNECTOR FEMALE FILTER	1

TOLERANCE UNSPECIFIED		REMARK:			SMT—FCT DONGGUAN THE FRIENDLY FAMILY				
LINE	ANGLE				东莞硕能塑胶模具有限公司				
.XXX=±0.005 .XX=±0.05 .X=±0.1 .=±0.2 XX=±0.5 XXX=±1	X=±2° .X=±1.5° .XX=±1° .XXX=±0.5°	MATERIAL			ASSEMBLY AND MOULD OF CLEANING PRODUCTS				
		APPROVED	CHECKED	DESIGNED	REV.	-	PART NAME	KIT ASSY IMOP 36 BASIC ITEAM W/O I-POWER	
				Yang	UNIT	MM	PART NO.	K1.IMP36N.FCT.0	FRAME SIZE
SHEET OF	DATE			2025/5/29	SCALE	2 : 1	DRAWING NO.		A4

REV.	DESCRIPTION	REVISED BY	DATE
A		Yang	29/5/2025

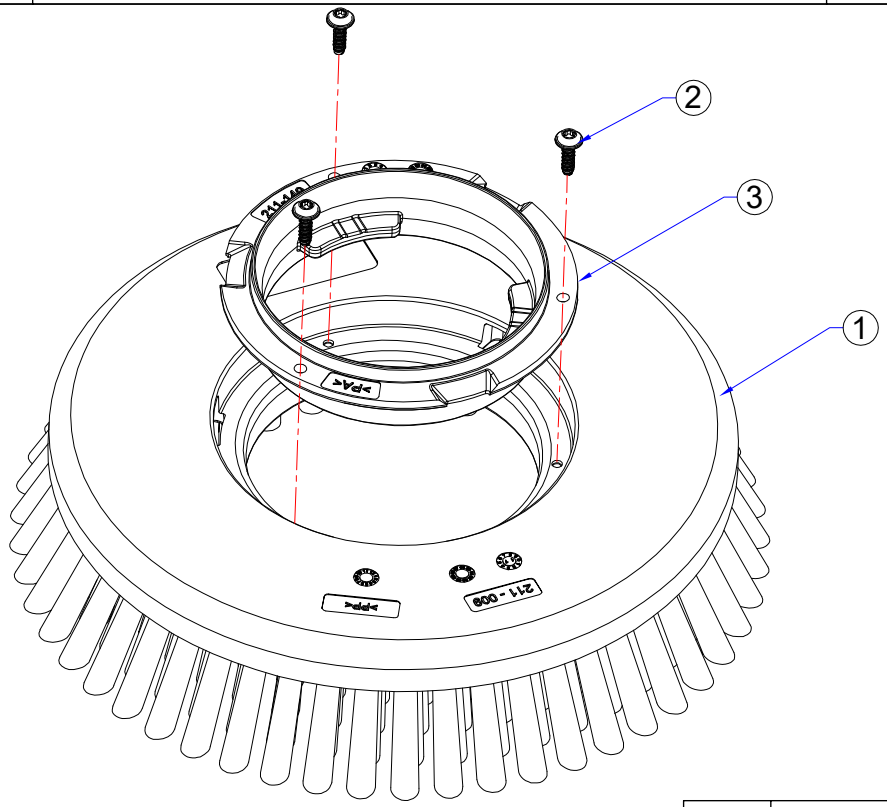

Item	P/N	Desciption	Qty
	S.115.1054.797/797B	ASSY BRUSH BLUE BRISTLE | BLUE LOCKER	
1	115.1055.797A	ASSY BRUSH BLUE 0.3PP BRISTLE	1
2	115.0011.0	(MCH 011-101) [101] EJOT PT SCREW WN 5451 30X10	3
3	115.1058.797F	BRUSH LOCK BLUE P312C	1

TOLERANCE UNSPECIFIED	REMARK:		SMT–FCT DONGGUAN THE FRIENDLY FAMILY				
LINE: .XXX=±0.005, .XX=±0.05, .X=±0.1, .=±0.2, XX=±0.5, XXX=±1 / ANGLE: X=±2°, .X=±1.5°, .XX=±1°, .XXX=±0.5°	MATERIAL		东莞硕能塑胶模具有限公司 ASSEMBLY AND MOULD OF CLEANING PRODUCTS				
	APPROVED	CHECKED	DESIGNED: Yang	REV. –	PART NAME: KIT ASSY IMOP 36 BASIC ITEAM W/O I-POWER		
				UNIT: MM	PART NO.: K1.IMP36N.FCT.0		FRAME SIZE
SHEET OF	DATE		2025/5/29	SCALE: 2 : 1	DRAWING NO.		A4

REV.	DESCRIPTION	REVISED BY	DATE
A		Yang	29/5/2025

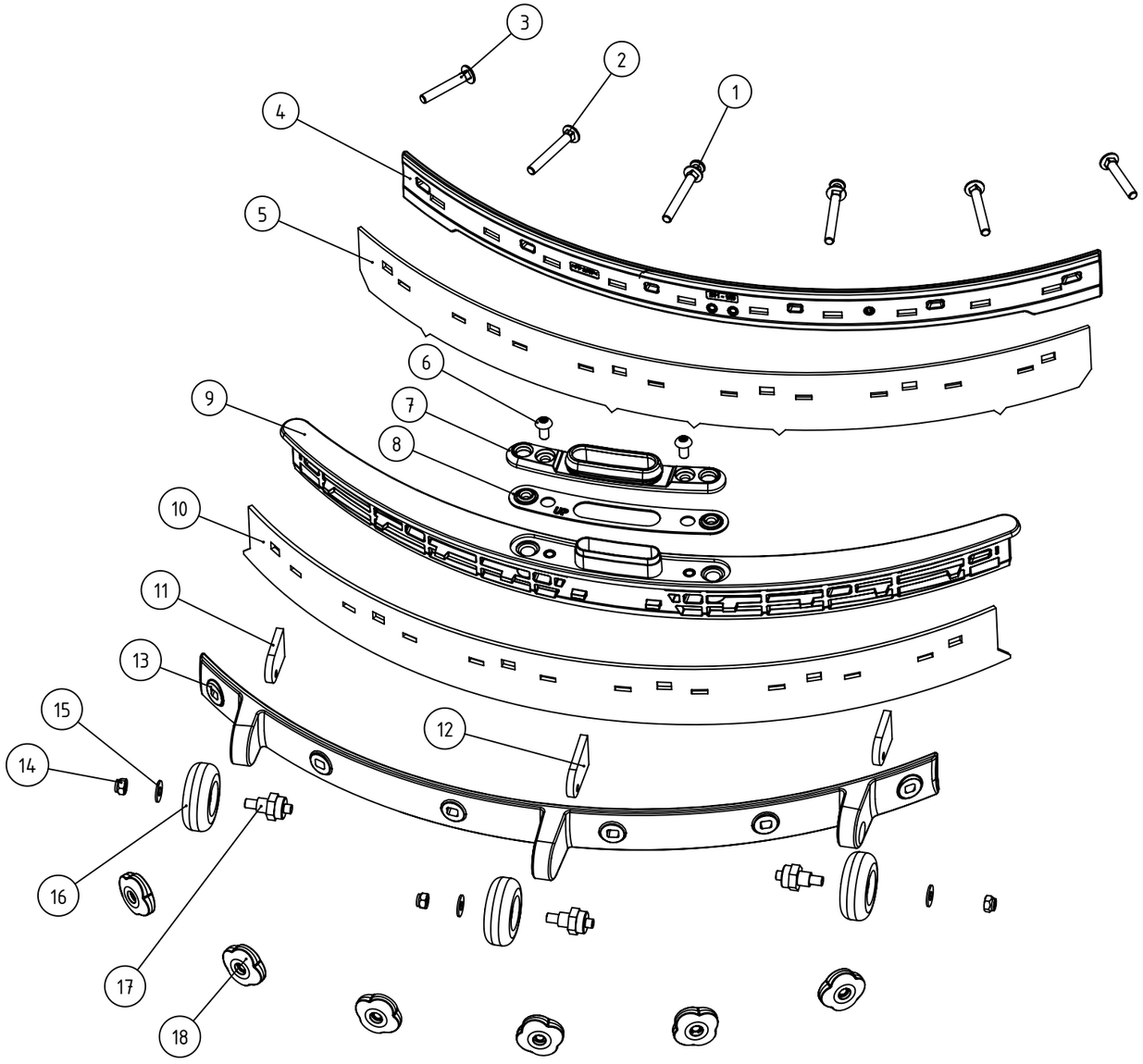

Item	P/N	Description	Qty.
	S.115.0062.2A	ASSY SQUEEGEE MAIN HOUSING TENNANT	
1	115.0069.0A	SQUEEGEE BOLT LARGE	2
2	115.0068.0A	SQUEEGEE BOLT MEDIUM	2
3	115.0067.0A	SQUEEGEE BOLT SMALL	2
4	115.0063.357C	SQUEEGEE FRONT HOUSING GREY P4	1
5	115.0065.2C	SQUEEGEE FRONT AIROFLEX T=2MM LINATEX MATERIAL	1
6	115.0095.0	CYLINDER ROUND HEAD CAP SCREW	2
7	115.0070.357C	SQUEEGEE BRACKET GREY P431C	1
8	115.0268.0	RUBBER WASHER SQUEEGEE PIN I-MOP LITE	1
9	115.0062.357C	SQUEEGEE MAIN HOUSING GREY P43	1
10	115.0066.2C	SQUEEGEE REAR T=2.5MM LINATEX MATERIAL	1
11	115.0071.0A	SQUEEGEE CASTOR BRACKET SHORT	2
12	115.0072.0A	SQUEEGEE CASTOR BRACKET LONG	1
13	115.0064.357D	SQUEEGEE REAR HOUSING GREY P431	1
14	04.0048.0	NUT M5 NYLON STAINLESS	3
15	00.0091.0	WASHER STAINLESS M5 5.1X12X1.0	3
16	115.0075.357A	QUEEGEE CASTOR GREY P431C	3
17	115.0076.0D	SQUEEGEE CASTOR AXIS	3
18	115.0073.8A	QUEEGEE FIXATION NUT YELLOW P122C	6

TOLERANCE UNSPECIFIED

LINE	ANGLE
.XXX=±0.005 .XX=±0.05 .X=±0.1 .=±0.2 XX=±0.5 XXX=±1	X=±2° .X=±1.5° .XX=±1° .XXX=±0.5°

REMARK:

SMT-FCT DONG GUAN
THE FRIENDLY FAMILY
东莞硕能塑胶模具有限公司
ASSEMBLY AND MOULD OF CLEANING PRODUCTS

MATERIAL							
APPROVED	CHECKED	DESIGNED	REV.		PART NAME	KIT ASSY IMOP 36 BASIC ITEAM W/O I-POWER	
		Yang	UNIT	MM	PART NO.	K1.IMP36N.FCT.0	FRAME SIZE
SHEET OF	DATE	2025/5/29	SCALE		DRAWING NO.		A3